Heterojunctions

- Heterojunctions
- Heterojunction bipolar transistor
  - SiGe
  - GaAs

Definitions

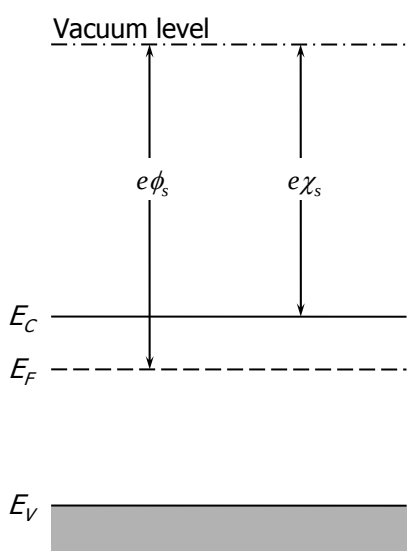

Element	Electron affinity, χ (eV)
Ge, germanium	4.13
Si, silicon	4.01
GaAs, gallium arsenide	4.07
AlAs, aluminium arsenide	3.5

Definitions

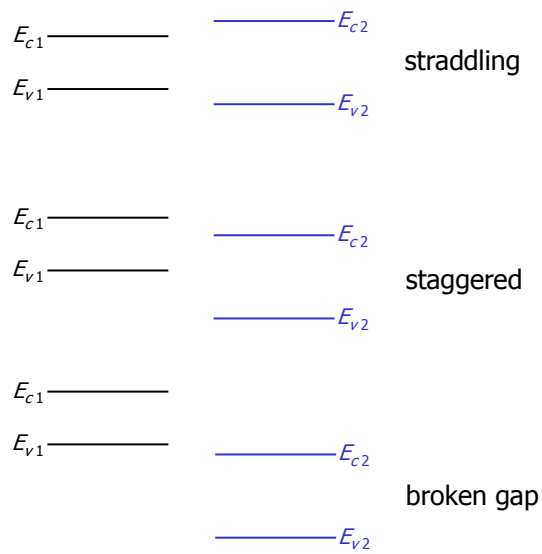

Band diagram

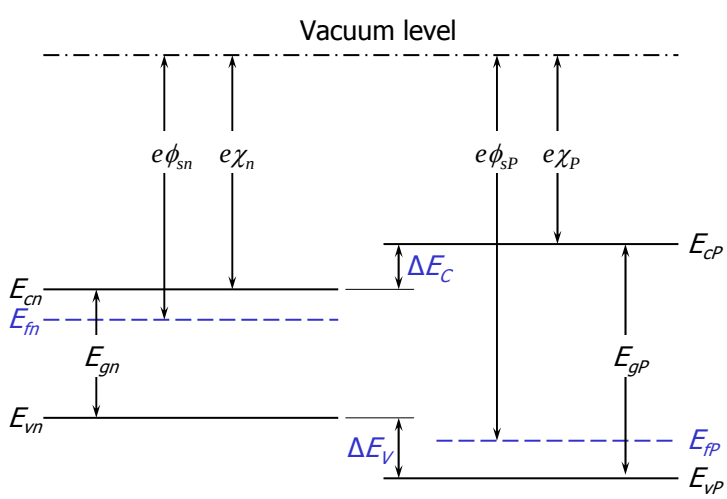

Band diagram

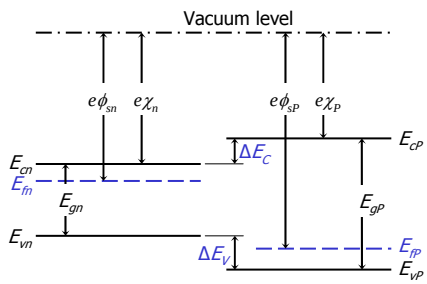

$$\Delta E_c = e(\chi_n - \chi_P)$$

$$\Delta E_c + \Delta E_v = E_{gP} - E_{gn} = \Delta E_g$$

Band diagram n-P junction

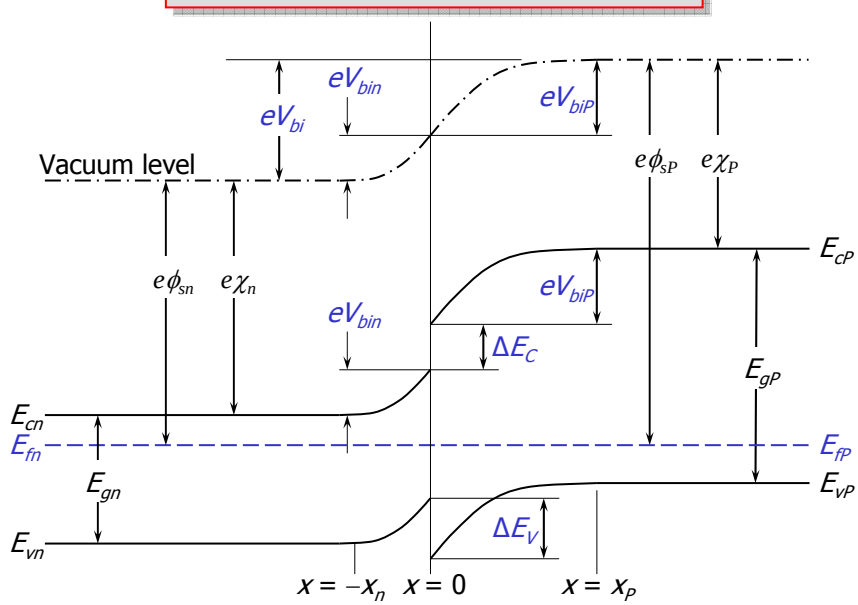

Electrostatics

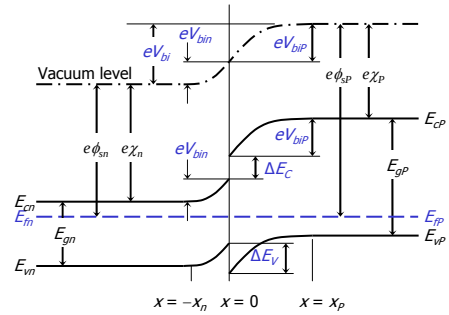

$$
\begin{aligned}
eV_{bi} &= \phi_{sP} - \phi_{sn} \\
&= \left[e\chi_P + E_{gP} - (E_{FP} - E_{vP})\right] - \left[e\chi_n + E_{gn} - (E_{Fn} - E_{vn})\right] \\
&= \ldots \\
&= \Delta E_v + kT \ln\left(\frac{p_{P0}}{p_{n0}} \cdot \frac{N_{vn}}{N_{vP}}\right)
\end{aligned}
$$

Electrostatics

Poisson equation: $\dfrac{d^2\phi(x)}{dx^2} = -\dfrac{dE(x)}{dx} = -\dfrac{\rho}{\varepsilon}$

Electric field becomes:

$$
\boxed{
\begin{aligned}
E_n &= \frac{eN_{dn}}{\varepsilon_n}(x_n + x) \\
E_P &= \frac{eN_{aP}}{\varepsilon_P}(x_P - x)
\end{aligned}
}
$$

Boundary condition

$$\boxed{E_n(x < -x_n) = E_P(x > x_P) = 0}$$

Electrostatics

Electric flux density continuous across junction:

$$\varepsilon_n E_n(x=0) = \varepsilon_P E_P(x=0) \Rightarrow N_{dn} x_n = N_{aP} x_P$$

Subsequent integration of electric field gives built-in voltage:

$$V_{bi} = V_{bin} + V_{biP} = \frac{eN_{dn}x_n^2}{2\varepsilon_n} + \frac{eN_{aP}x_P^2}{2\varepsilon_P}$$

... and for the depletion region width:

$$W = x_n + x_P = \sqrt{\frac{2\varepsilon_n\varepsilon_P\left(N_{dn}+N_{aP}\right)^2 V_{bi}}{eN_{dn}N_{aP}\left(\varepsilon_n N_{dn}+\varepsilon_P N_{aP}\right)}}$$

Band diagram p-N junction

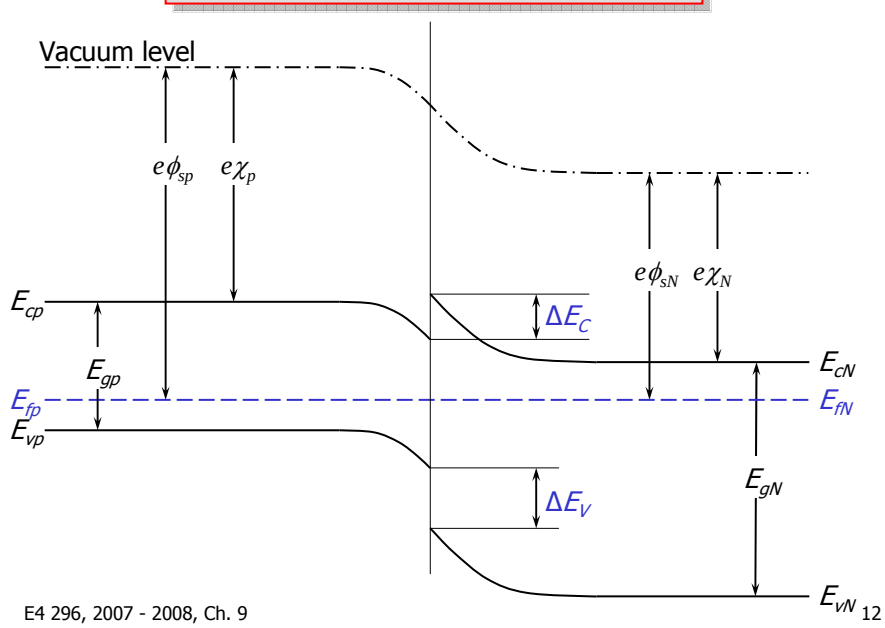

Band diagram n-N junction

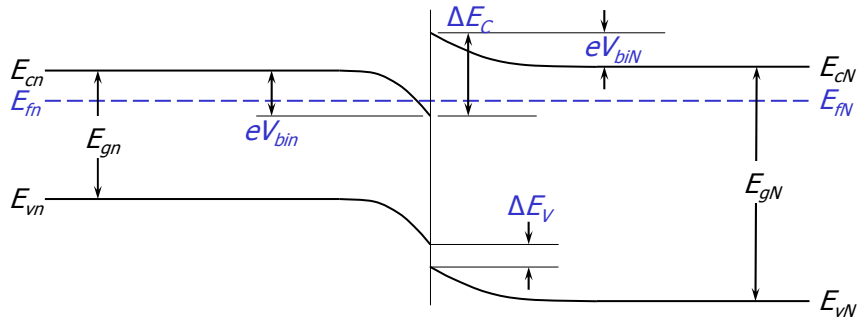

Band diagram n-N junction

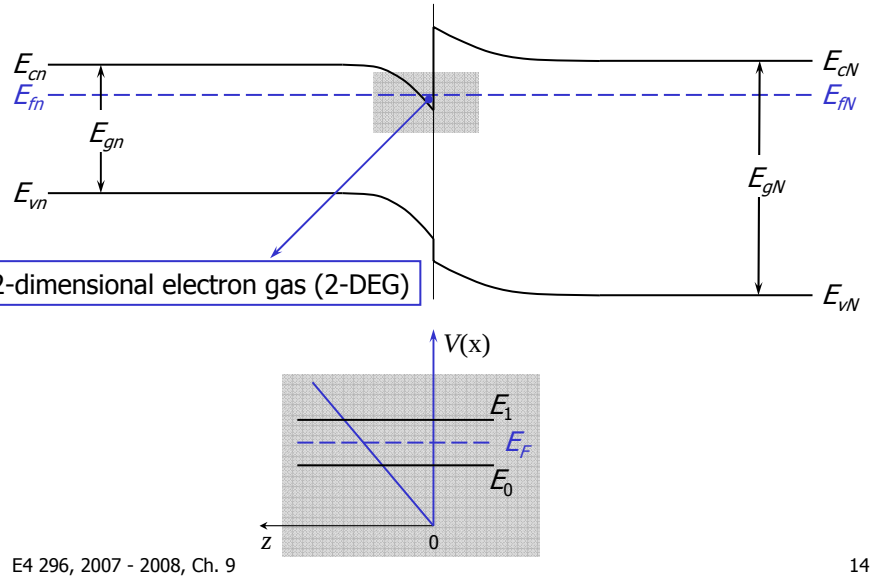

Band diagram n-N junction with grading

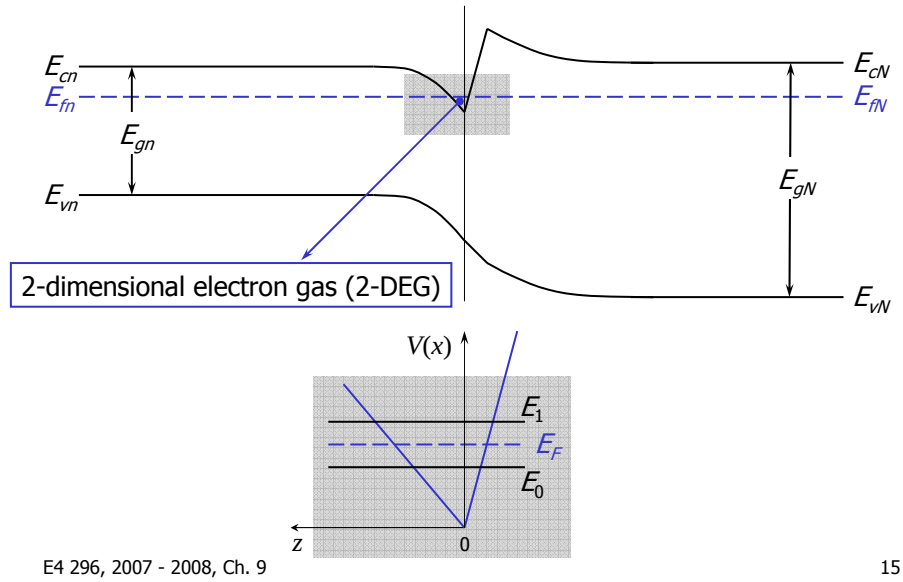

Current behaviour in heterojunctions

Characteristics of the junctions between the different materials:

- High recombination/generation rate.
- There is a potential barrier, φ_{b0}.

At metal-semiconductor junction:

- Metal is infinite good conductor

In a p-n junction: drift-diffusion model

$\Downarrow$

Metal-semiconductor: how many electrons can overcome the potential barrier

Charge transport

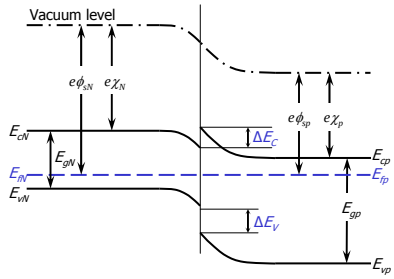

Differences with homojunctions:

- Barrier height not the same for electrons and holes
- One band (in this case the conduction band) similar to a rectifying metal-semiconductor junction
- (Effective mass different on either side junction)

Current-voltage relation

General current-voltage relation: $J = J_S\left[\exp\left(\frac{eV_a}{kT}\right)-1\right]$

For a rectifying metal-semiconductor junction

$$J_S = A^* T^2 \exp\left(-\frac{e\phi_{Bn}}{kT}\right), \quad \text{with}: \; A^* \equiv \frac{4\pi m_n^* k^2}{h^3}$$

…and a p-n junction:

$$J_S = \frac{eD_n n_{p0}}{L_n} + \frac{eD_p p_{n0}}{L_p}$$

Heterjunction Bipolar Transistor

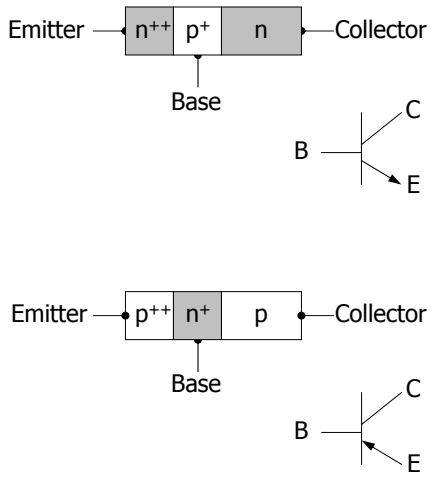

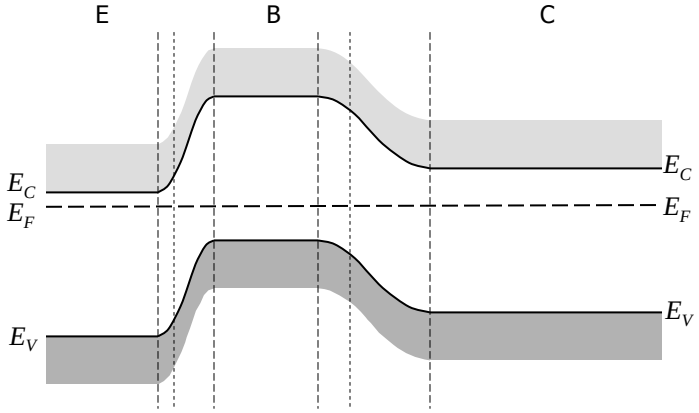

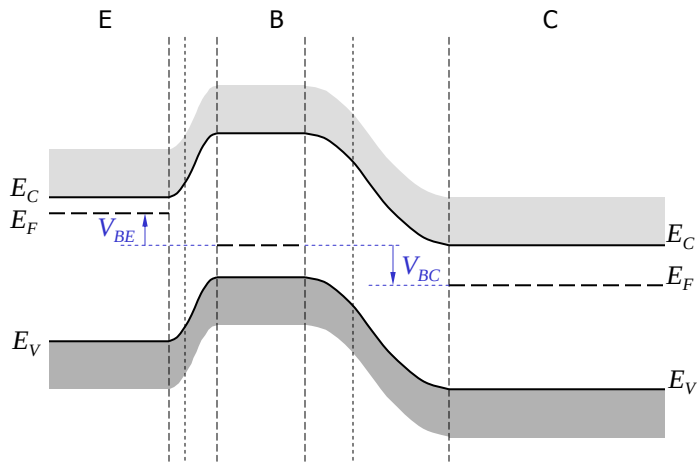

Minority carrier concentration in the base

Study transport equation (no electric field, no generation, and static equilibrium):

$$D_B \frac{\partial^2 \left(\delta n_B(x)\right)}{\partial x^2} - \frac{\delta n_B(x)}{\tau_{B0}} = 0$$

Solve this differential equation with the correct boundary conditions (!) .....pff .....pff.....:

$$\delta n_B(x) = \frac{n_{B0}\left\{\left[\exp\left(\frac{eV_{BE}}{kT}\right)-1\right]\sinh\left(\frac{x_B - x}{L_B}\right) - \sinh\left(\frac{x}{L_B}\right)\right\}}{\sinh\left(\frac{x_B}{L_B}\right)}$$

$$\cong \frac{n_{B0}}{x_B}\left\{\left[\exp\left(\frac{eV_{BE}}{kT}\right)-1\right](x_B - x) - x\right\}$$

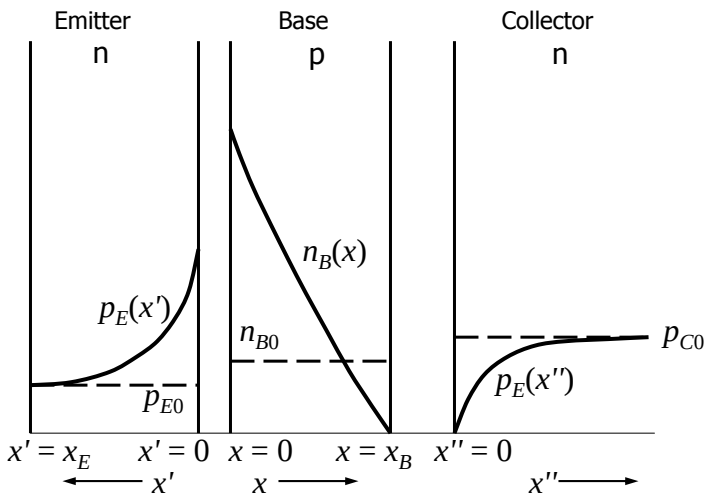

Small-signal common base current gain

$$\alpha = \underbrace{\left(\frac{J_{nE}}{J_{nE}+J_{pE}}\right)}_{\gamma}\underbrace{\left(\frac{J_{nC}}{J_{nE}}\right)}_{\alpha_T}\underbrace{\left(\frac{J_{nE}+J_{pE}}{J_{nE}+J_R+J_{pE}}\right)}_{\delta}$$

- Emitter injection efficiency factor, γ: ratio electron diffusion current / total diffusion current
- Base transport factor, α_T: determines the efficiency of charge transport across the base, in other words is a measure for the recombination losses in the base
- Recombination factor, δ: measure for the quality of the emitter-base junction and gives an indication about the recombination

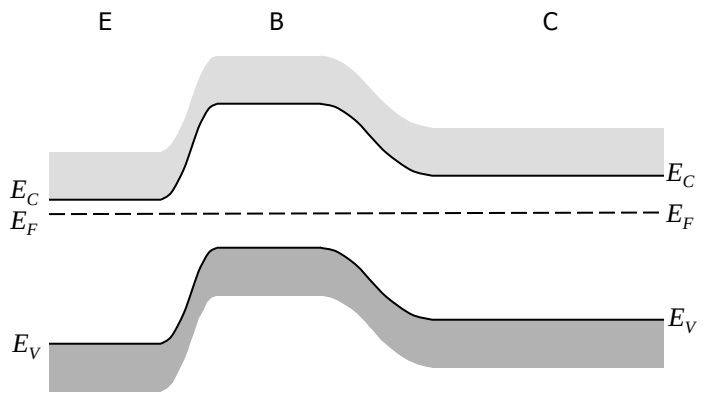

Band diagram SiGe HBT

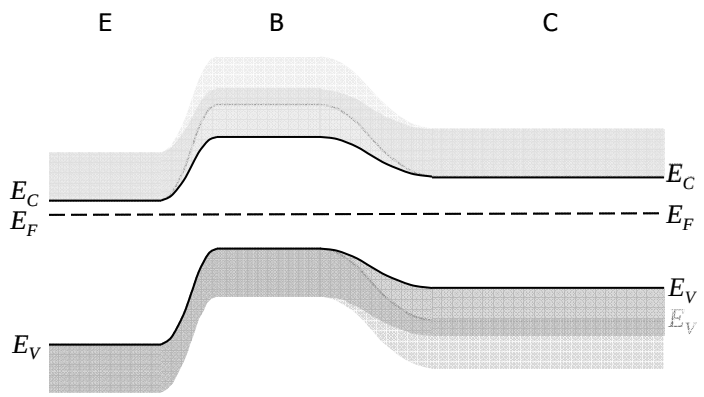

Band diagram HBT

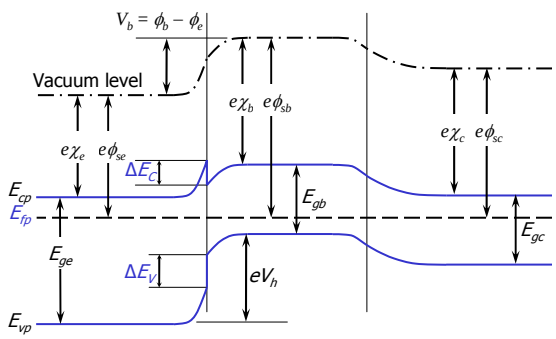

Current gain

Common-emitter current gain: $\beta_0 \equiv \dfrac{\alpha_0}{1-\alpha_0} = \dfrac{\gamma\alpha_T\delta}{1-\gamma\alpha_T\delta} \approx \dfrac{\gamma}{1-\gamma}$

Substituting for γ: $\beta_0 = \dfrac{1}{\dfrac{D_E}{D_B}\dfrac{p_{E0}}{n_{B0}}\dfrac{x_B}{x_E}} \approx \dfrac{n_{B0}}{p_{E0}}$

For the thermal equilibrium carrier concentrations we have:

$$p_{E0} = \frac{n_{i,E}^2}{N_E} = \frac{N_{C,E}N_{V,E}\exp\left(-E_{g,E}/kT\right)}{N_E}$$

$$n_{B0} = \frac{n_{i,B}^2}{N_B} = \frac{N_{C,B}N_{V,B}\exp\left(-E_{g,B}/kT\right)}{N_B}$$

Current gain

$$\beta_0 \sim \frac{N_E}{N_B}\exp\left(\frac{E_{g,E}-E_{g,B}}{kT}\right) = \frac{N_E}{N_B}\exp\left(\frac{\Delta E_g}{kT}\right)$$

Current gain increases exponentially with band gap difference

$\Rightarrow$ Larger current gain allows higher base doping

$\Rightarrow$ Higher base doping allows narrow base width

$\Rightarrow$ Narrow base width implies a faster device