Chapter 9: Mathematical Review

STRUCTURAL GEOLOGY and tectonics, mainly descriptive sciences in the past, are converging towards quantitative and mechanical analyses of deformation structures. Much of deformation modeling involves mathematical expressions. But the true aim is to grasp the physical reality behind the mathematical symbols. Despite the necessary theoretical angle, the concepts and equations introduced in this book are immediately applied to geological examples. However, study of the subject may be facilitated by reviewing some of the principal mathematical methods used for describing the mechanics of rock deformation. A number of refresher exercises are, also, included for this purpose.

Contents: Section 9-1 provides some encouraging hints to help the reader overcome any reservations about the use of mathematics in geoscience. Section 9-2 reviews the essentials of ordinary and partial differentials of scalar quantities. Section 9-3 outlines the basic features of partial differentials operating on vector quantities. Section 9-4 explains the importance of differential equations in geological applications. Section 9-5 resumes some principles of integration. Section 9-6 is devoted to tensors and matrices. Determinant operations are explained in section 9-7. Section 9-8 gives a brief review of complex variables and complex functions.

Practical hint: **Good articles with a mathematical approach to geology and rock mechanics feature in *Mathematical Geology*, the *Journal of Geophysical Research*, and the *International Journal of Rock Mechanics and Mining Science*. Examine the latest issues of these journals, and present a seminar on a selected topic of timely interest.**

9-1 Psychology of mathematics

Scientists communicate their ideas partly according to their own personal taste and character. According to one satirical view, mathematicians can be described as an illustrious collection of individuals with a strong drive to express abstract ideas in terms of symbols and formulae. This preoccupation with cryptically encoded concepts seems particularly strong among pure mathematicians. However, applied mathematicians normally utilize their technical tool kit of mathematics to describe natural processes. For all mathematicians, mathematics is a language which can be understood if one is familiar with the tedious conventions and meanings of the symbols used in its communication. The challenge faced by non-mathematicians is to be able to shift through the vast array of operating rules and use those parts which are useful for a particular application of interest.

Indeed, much of mathematics came into existence because of the need of natural philosophers or physicists for concise expressions to describe phenoma observed in nature. For example, both Leibnitz and Newton developed, probably independently, the differential calculus in order to be able to describe spatial and temporal changes of physical quantities in natural systems. In doing so, they not only introduced a principal tool of mathematical physics (or applied mathematics), but they, also, provided an example of the diversity of notations, employed in what is commonly perceived as an exact science. The Newtonian notation for velocity simply is $\dot{u}$, where u is the displacement and the dot symbolizes the time derivative. Exactly the same derivative is, according to Leibnitz, annotated by du/dt. Similarly, acceleration or the second derivative of displacement, according to Newton, is $\ddot{u}$, and it is du^2/dt, according to leibnitz' differentials. The dot notation of Newton is usually reserved for time derivatives, and, in general, derivatives are primed: u' and u'' for first and second displacement gradients.

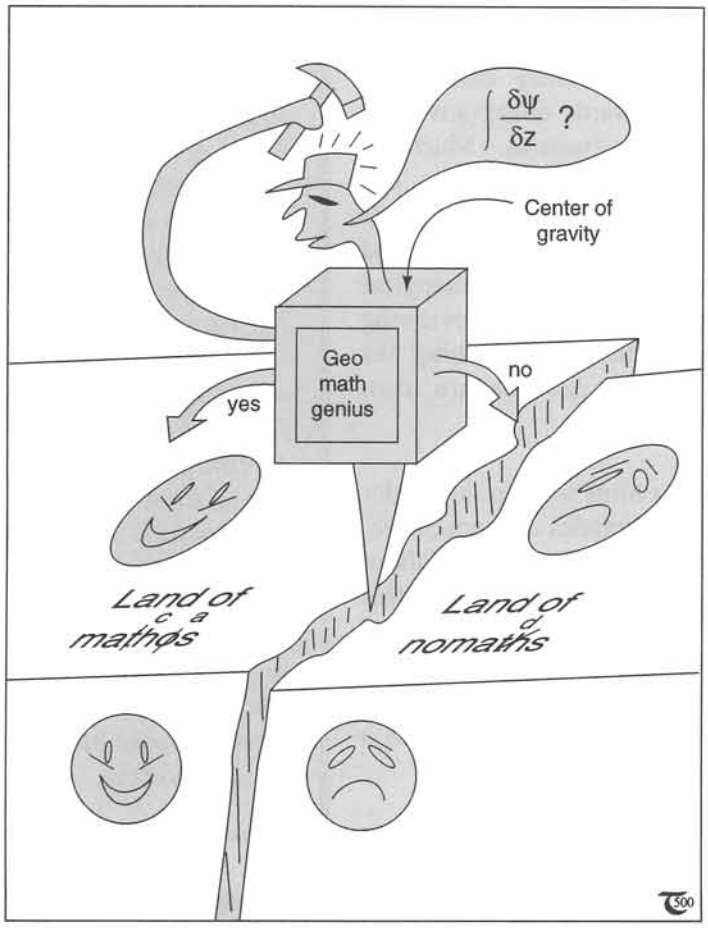

Figure 9-1: Some of you may find themselves trapped in a partial differential. It requires some hammering, gentle but persistent, to get through!

There are many more examples of the variety of notations used for mathematical operations. One must be aware of the arbitrary nature of the symbols available, and each notation is supported by its own circle of respective enthusiasts - some larger than others. This led Chris Truesdell, who introduced the kinematic vorticity number now adopted - and, unfortunately, much abused - in geoscience, to state in his 1954 book on *Kinematic Vorticity* (p. XIV): *" For the present work it was necessary to use <u>some</u> notation, and thus to give grounds for criticism to the adherents of the others. I assure the reader that notation is largely a matter of*

indifference to me, and I beg him (present author: & her!), laying symbolic prudery aside, to strip off from our subject the casual tires of fashion and to join me in contemplation of the naked beauty of its essentials. Originally, I had written the whole in the Gibbs symbolism, but my colleagues have convinced me that use of some of the operations on dyadics would discourage those few readers who might otherwise overleaf these pages. On the other hand, believing that at least for simple vectorial formulae the straightforwardness of Gibbs's notation is very helpful, I have adopted a compromise scheme...."

For those geoscientists and engineers, less inclined to embrace mathematics, it is important to realize that it provides tools to improve our understanding of rock deformation structures (Fig. 9-1). It is, also, fair to add that the time required to familiarize oneself with these tools is well spent. But beware of the differences in the general approach of writings in geoscience and mathematics. In particular, geological papers comprise a large proportion of descriptive science, which can be easily and rapidly digested. This is unlike mathematical papers, which usually are more technical and concise in their description. Therefore, a detailed understanding of the average mathematical paper requires much more effort on behalf of the reader than the average geological paper. The message here is that one should be prepared to devote a little bit of time to come to terms with mathematics in geoscience. This chapter was specifically written to direct your attention to some of the mathematical methods most commonly used in studies of rock mechanics.

☐Exercise 9-1: Gabor Korvin, author of *Fractal Models in the Earth Sciences* (1992, Elsevier), kindly suggested the following exercise at this point. Reflect on the arbitrary nature of mathematical symbols by finding out how to multiply and subtract numbers, using Roman notation. Calculate the value of: a) MDCCLXI times CCCIV. b) MDCIV minus LIX.

9-2 Ordinary and partial differentials of scalars

Differential equations are extremely crucial in the description of geological phenomena. For example, consider the lithostatic pressure, P, which normally increases with depth, according

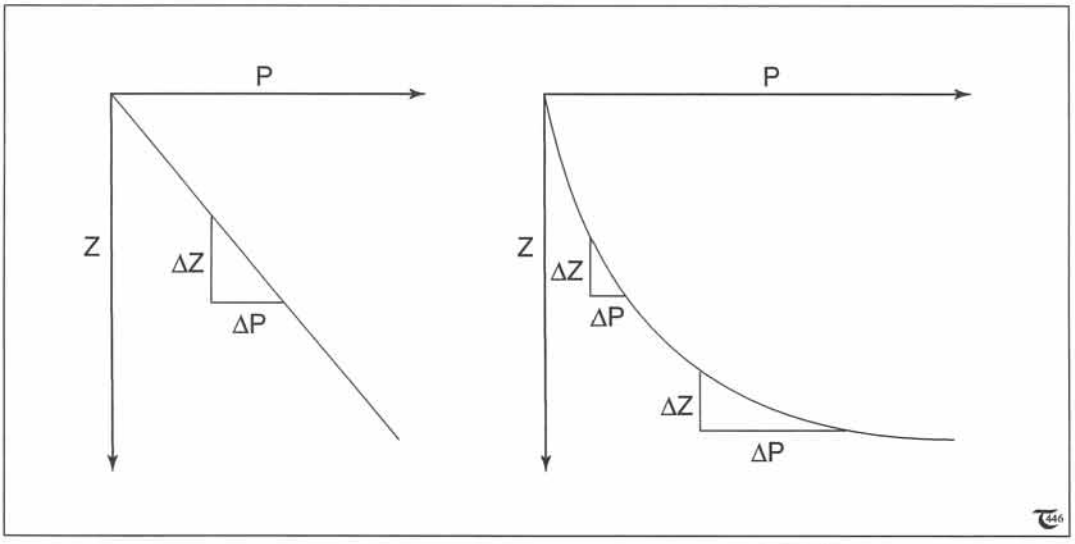

***Figure 9-2:** a) & b) The derivative of pressure functions: (a) linear, and (b) exponential.*

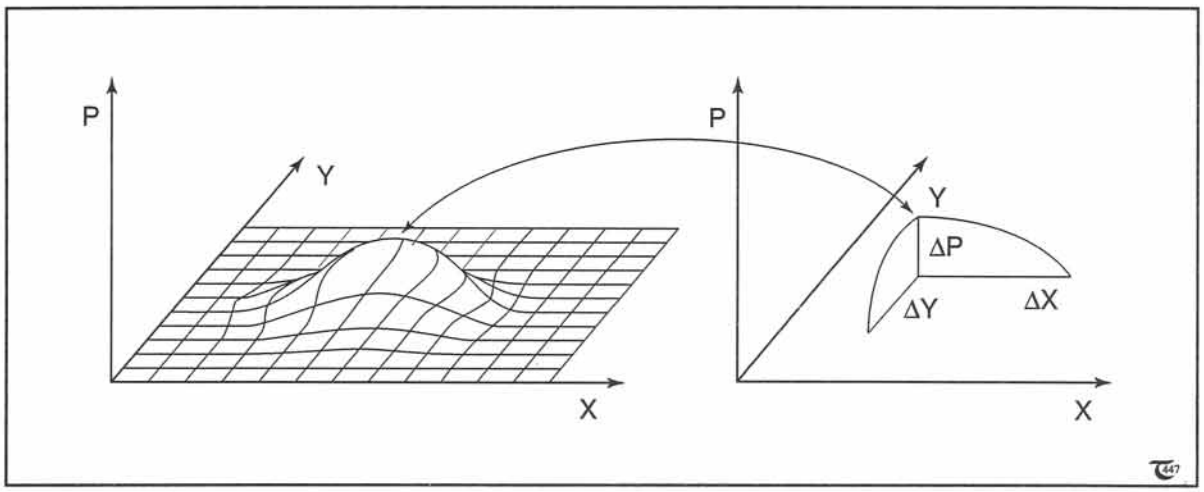

Figure 9-3: *Pressure gradients. (a) Graph, illustrating the variation of pressure within the XY-plane. (b) The direction of maximum change or steepest pressure gradient is given by ∇P [cf., eq. (9-5)].*

to:

$$P=\rho_0 gz \qquad (9\text{-}1)$$

with characteristic density, ρ_0, gravity, g, and depth, z. In other words, the scalar variable, P, is a function of z or P=f(z) (Fig. 9-2a). The *derivative* is the pressure gradient over an infinitesimal increment of length, dP/dz=df(z)/dz:

$$f'(z)=dP/dz= \lim \Delta P/\Delta z \text{ (for } \Delta z \text{ approaching to 0)} \qquad (9\text{-}2)$$

The *differential* is dP=df'(z) dz. The derivative is, also, known as the *differential quotient* or ratio of two differentials, dP and dz. The process of finding derivatives is termed *differentiation*.

Table 9-1: *Elementary differentiation rules.*

$d(cu)/du=c$	$du^n/du=nu^{n-1}$
$dc^u/du=c^u \ln c$	$de^u/du=e^u$
$d \ln u/du=1/u$	$d \sin u/du=\cos u$
$d \cos u/du=-\sin u$	$d(vu)/du=v+u(dv/du)$

For the linear depth dependence of pressure, the pressure gradient is the same in every point, so that dP/dz=ΔP/Δz. Note that "d" is used for infinitesimal increments or differentials, and Δ is a finite differential. This example illustrates that finding the derivative or infinitesimal gradient of a scalar quantity, which varies linearly, is simple, because finite units can be used. No differentiation rules are needed for such simple cases.

Figure 9-2b illustrates pressure, which increases in non-linear fashion with depth, due to "differential" compaction of sedimentary rocks:

$$P=\rho_0 gz^n \qquad (9\text{-}3)$$

with exponent n larger than unity. For this case, not only the pressure, but, also, the pressure gradient, increases with depth, so that dP/dz is not equal to ΔP/Δz. The function $\rho_0 gz^n$ needs to be differentiated in order to find the derivative dP/dz at a specific depth. For this purpose a set of differentiation rules or formulae are available (Table 9-1). The derivative of the function in equation (9-3) is as follows:

$$f'(z)= d(\rho_0 gz^n)/dz=n\rho_0 gz^{n-1} \qquad (9\text{-}4)$$

The change of lithostatic pressure in one direction can be expressed as an ordinary differential. However, this is useful only in the absence of lateral changes in lithostatic pressure. Such lateral changes in pressure at a particular, constant depth are graphed in Figure 9-3a. The gradient of pressure in any horizontal direction can be expressed as the sum of two, partial derivatives, $\partial P/\partial x$ and $\partial P/\partial y$. The pressure gradient in the X-direction is $\partial P/\partial x$; that in the Y-direction is $\partial P/\partial y$. The maximum variation of pressure in three dimensions can be concisely represented by a vector, pointing in the direction of maximum change:

$$\nabla P = (\partial P/\partial x, \partial P/\partial y, \partial P/\partial z) \qquad (9\text{-}5)$$

using for the *vector operator* the Greek symbol nabla, ∇, now, also, termed "del." The vector operator, if applied to a scalar field, provides the gradient of a scalar.

□Exercise 9-2: The simple shear deformation of Figure 9-4 can be described by the following stream function (see section 13-2): $\psi = (\dot{\gamma}/2)z^2$, with angular shear strain-rate, $\dot{\gamma}$. The velocity of particles, moving in the X-direction of shear, is given by $v_x = d\psi/dz$. The gradient of those velocities is given by $dx/dz = d^2\psi/dz^2$. Determine expressions for the velocity and its gradient, by differentiation, using the rules of Table 9-1.

9-3 Partial differentials of vectors

A vector quantity has both a magnitude and a direction and is itself commonly a derivative of another quantity. For example, a velocity vector, v, can be defined as the change of displacement, u, over time, t, in the principal directions:

$$v = (\partial u_1/\partial t, \partial u_2/\partial t, \partial u_3/\partial t) \qquad (9\text{-}6)$$

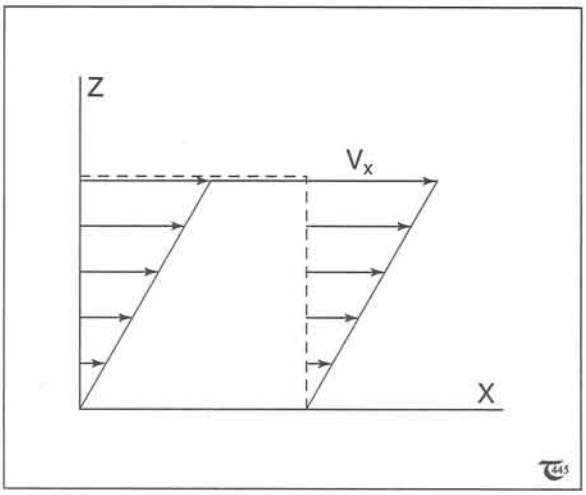

Figure 9-4: Uniform simple shear flow in XZ-plane. See exercise 9-2.

The understanding is that u_1, u_2, and u_3 are parallel to the coordinate axes X_1, X_2, and X_3. The choice of numerical or alphabetical indices for vector components is entirely arbitrary. For example, an alternative system uses u_x, u_y, and u_z as vector components in a frame of reference, labelled XYZ rather than $X_1X_2X_3$. It is, also, permitted, and sometimes clearer, to use numerical indices in XYZ-space, as adopted here.

The gradient operator, if applied to a vector, represents the matricial gradient:

$$\nabla \mathbf{v} = \begin{bmatrix} \partial v_1/\partial x & \partial v_1/\partial y & \partial v_1/\partial z \\ \partial v_2/\partial x & \partial v_2/\partial y & \partial v_2/\partial z \\ \partial v_3/\partial x & \partial v_3/\partial y & \partial v_3/\partial z \end{bmatrix} \qquad (9\text{-}7)$$

This is the velocity-gradient tensor, which is mathematically identical to the sum of the strain-rate and vorticity tensors [see section 9-6, equations (9-16a & b)]. Physically, it is obvious that distortion must result if there exists an infinitesimal gradient of velocity of particles in an infinitesimal volume. The distortion always is homogeneous for such small volumes, and the changes in shape are controlled by the relative magnitude of the strain-rate and vorticity tensors (see sections 9-6 & 13-6).

The vector operator *del* is further applied to vectors in two different ways, either as the *dot product* (∇.v) or as a *cross-product* (∇ x v). The dot product, also termed the *divergence* or simply *div*, reduces the vector, on which it is applied, to a scalar number:

$$\nabla.\mathbf{v}=(\partial v_1/\partial x)+(\partial v_2/\partial y)+(\partial v_3/\partial z) \qquad (9\text{-}8)$$

The physical importance lies in the fact that for an incompressible fluid, with neither loss nor production of matter, the divergence of the velocity must be zero everywhere. The dot product is, also, referred to as the *scalar product*, because it generates a scalar quantity.

The cross-product of the velocity vector results in another vector, termed the *curl* vector:

$$\nabla \text{ x } \mathbf{v}=\begin{bmatrix} \partial v_2/\partial z-\partial v_3/\partial y \\ \partial v_3/\partial x-\partial v_1/\partial z \\ \partial v_1/\partial y-\partial v_2/\partial x \end{bmatrix} \qquad (9\text{-}9)$$

Physically, the curl of a velocity vector results in the vorticity vector ($\dot{\omega}_1,\dot{\omega}_2,\dot{\omega}_3$), used in elements of the vorticity tensor [eqs. (9-16a) & (13-25b)]. The cross-product is, also, known as the *vector product* because it transforms one vector quantity into another vector quantity. Confusingly, the *curl* is sometimes referred to as the rotation vector (*rot*) in European literature. Beware that physically the angular velocity or rotation-rate vector, Ω, is only half the vorticity vector: $\Omega=(curl\ \mathrm{v})/2=(rot\ \mathrm{v})/2$.

□Exercise 9-3: Consider a pure shear deformation at constant strain rate and variable velocity, according to $v_x=\dot{e}_1x$, $v_z=\dot{e}_3z$, and $v_y=0$ (Fig. 9-5). a) Determine the gradient tensor, divergence, and curl vector of the velocity for this particular pure shear. b) Discuss the physical significance of these results.

The operator *del* is, also, employed in the *Laplacian operator* (a second-order differential):

$$\nabla^2=\nabla.\nabla=(\partial^2/\partial x^2)+(\partial^2/\partial y^2)+(\partial^2/\partial z^2) \qquad (9\text{-}10)$$

The Laplacian operator is applied in biharmonic equations, operating on stream functions (eq. 13-3). If the biharmonic function is zero, static equilibrium is automatically fulfilled, and any accelerations unaccounted for cannot occur.

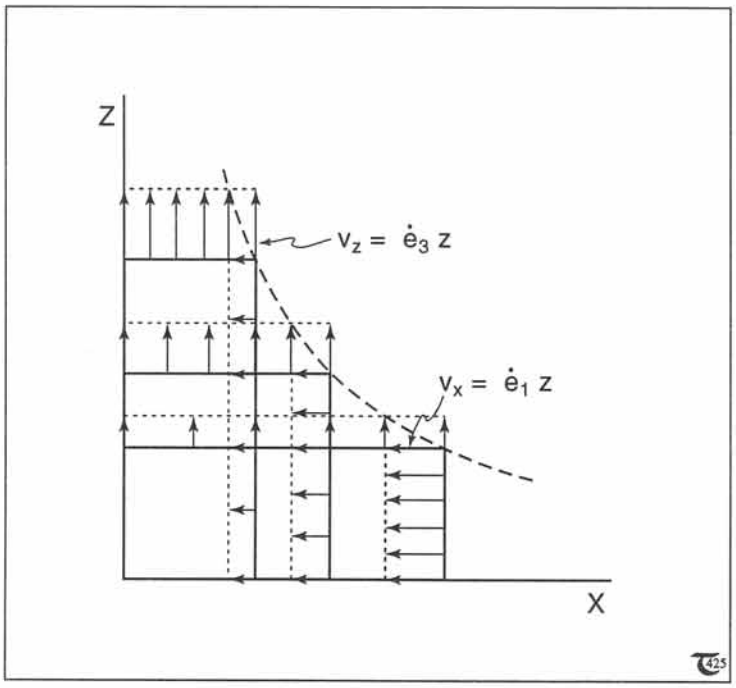

Figure 9-5: Uniform pure shear flow at constant strain rate. See exercise 9-3.

9-4 Partial differential equations

An equation containing derivatives is called a differential equation, and it becomes a partial differential equation if it comprises partial derivatives. Differential equations are extensively used in continuum and fluid mechanics to describe the physical state of the medium studied. For example, the stress in an incompressible fluid in every point is given by the following differential equation:

$$\tau_{ij}=(\eta/2)[(\partial v_i/\partial x_j)+(\partial v_j/\partial x_i)] \qquad (9\text{-}11)$$

Table 9-2: Elementary integration rules.

$\int cu\,dx = c\int u\,dx$	$\int u^n\,du = u^{n+1}/(n+1)$
$\int c^u\,du = c^u/\ln c$	$\int e^u\,du = e^u$
$\int u^{-1}\,du = \ln u$	$\int \cos u\,du = \sin u$
$\int \sin u\,du = -\cos u$	$\int u\,dv = uv - \int v\,du$

with viscosity, η, stress tensor, τ_{ij}, and strain-rate tensor, $(1/2)[(\partial v_i/\partial x_j)+(\partial v_j/\partial x_i)]$. A flow is considered steady state if the velocity, density, pressure, and other physical quantities at any spatial point do not vary over time; their derivative over time is zero ($\partial/\partial t=0$).

□Exercise 9-4: a) Determine the analytical expression for the stress tensor for the particular simple shear of exercise 9-2, using the differential equation (9-11). b) Determine the magnitude of the stress tensor in MPa for a thrust movement with $\dot{\gamma}=10^{-14}\ s^{-1}$ and $\eta=10^{22}$ Pa s.

9-5 Integration

An integral, also termed anti-derivative, is technically defined as the primitive function, f(z), which suits the derivative, f'(z). The process of determining the integrals, that belong to particular derivatives, is called integration. Because differential equations are so important in continuum mechanics and fluid dynamics, integration is frequently required. Some elementary integration rules are given in Table 9-2.

For example, the stream function is defined by a pair of coupled differential equations: $v_x=\partial\psi/\partial z$ and $v_z=-\partial\psi/\partial x$ (see section 13-2). The actual stream function itself can be found by integration of the velocity components for a particular flow field:

$$\psi=\int_z v_x dz+\int_x v_z dx+c \qquad (9\text{-}12)$$

A simple shear, parallel to the X-axis, has a velocity profile, given by: $v_x=(\gamma/2)z$ and $v_z=0$. Solving the integrals of expression (9-12) yields:

$$\psi=(\dot{\gamma}/2)z^2+c \qquad (9\text{-}13)$$

The so-called boundary condition is that no material may move across the X-axis, so that ψ must be zero at $z=0$. This leads to the elimination of the constant, which is zero.

□Exercise 9-5: Determine, by integration, the stream function for the pure shear flow of exercise 9-3.

9-6 Tensors and matrices

Scalar quantities are represented by a single symbol representing the scalar. *Vector quantities* - such as velocities - require representation by *column matrices*, which comprise one column only. The matrix elements are given conveniently by v_i (with $i=1,\ldots,3$ for 3D approaches). *Tensor quantities* - such as stress, strain, strain-rate, infinitesimal rotation, spin, vorticity, and deformation - are all represented in 3D, by 3x3 matrices. The first row specifies the three parameters in the X-direction, the second row has three parameters valid for the Y-direction, and the third row is pertinent to the Z-direction. This assumes a Cartesian coordinate system; similar tensor arrangements result in other frames of reference.

A general 2D deformation can be represented by a deformation matrix, F, which transfers each particle of the undeformed continuum with position (x_0,z_0) to the deformed position (x_1,z_1):

$$\begin{bmatrix} x_1 \\ y_1 \\ z_1 \end{bmatrix} = \begin{bmatrix} F_{11} & 0 & F_{13} \\ 0 & 1 & 0 \\ F_{31} & 0 & F_{33} \end{bmatrix} \begin{bmatrix} x_0 \\ y_0 \\ z_0 \end{bmatrix} \qquad (9\text{-}14)$$

The unit square of Figure 9-6 has been deformed using various deformation matrices. Many 2D deformations, in which the intermediate axis of the unit volume retains unit length, are commonly described by a 2x2 matrix:

$$\begin{bmatrix} x_1 \\ y_1 \end{bmatrix} = \begin{bmatrix} F_{11} & F_{12} \\ F_{21} & F_{22} \end{bmatrix} \begin{bmatrix} x_0 \\ y_0 \end{bmatrix} \qquad (9\text{-}15)$$

which ignores the unchanging intermediate axis and fixes the coordinate axes, such that all deformation takes place in the XY-plane.

Obviously, the successful manipulation of tensor quantities requires a good understanding of matrix computation. The deformation matrix can be represented either by its elements, F_{ij}, or by either a bold capital letter, **F**, or italicized capital, *F*, for the matrix as a whole. Similarly, vectorial matrices can be represented by their elements, v_i, a bold lower case letter, **v**, an italicized lower case letter, *v*, or by superposing a vector symbol on an ordinary lower case letter, v. There is a whole range of operating rules for the multiplication and subtraction of matrices. These rules are summarized in Table 9-3. The elements of an m by n matrix, A, can be written as a_{mn}. The elements in the first row are a_{1n}, setting n at 1 to m. Elements in the first column are found by a_{m1}, setting m at 1 to n.

The transpose of a matrix is denoted with a capital letter T for the exponent, $\mathbf{A}^T$. Many matrices applied in rock mechanics are either

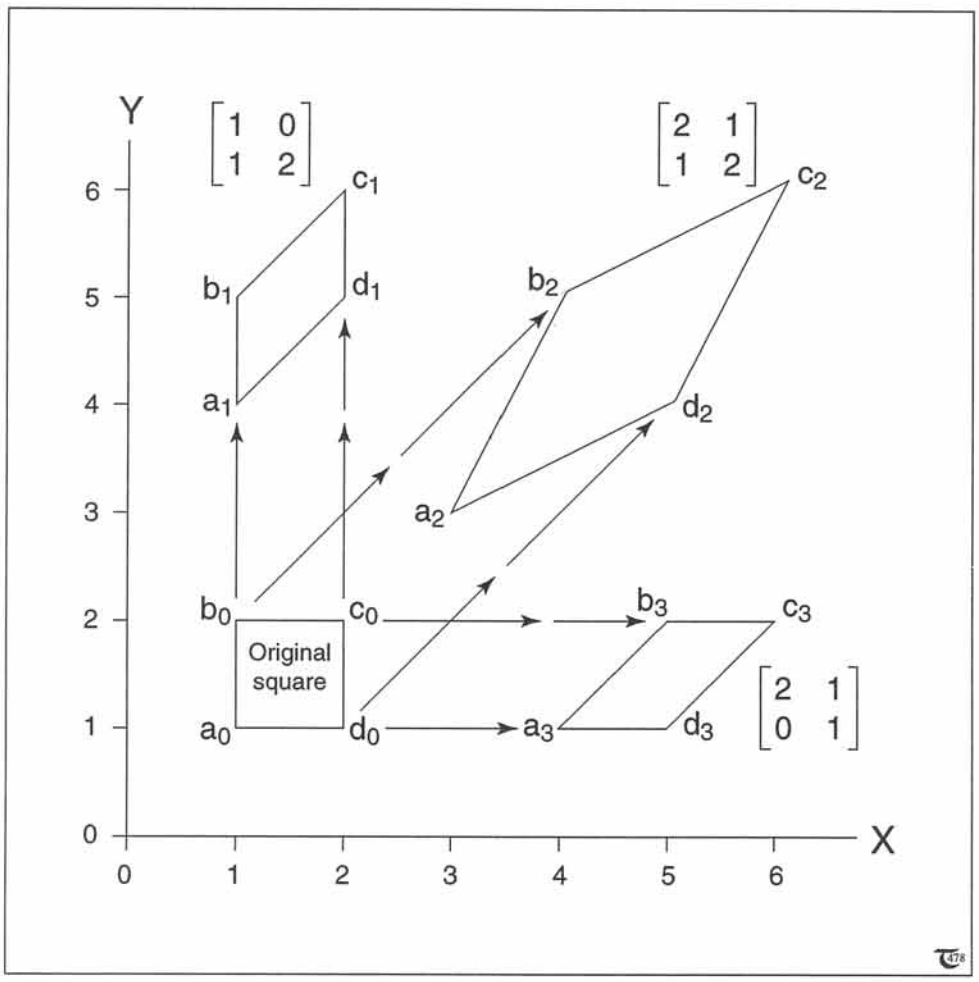

Figure 9-6: *Examples of finite deformation matrices deforming a unit square.*

Table 9-3: Elementary matrix operation rules.

$A+B=a_{ij}+b_{ij}$	$A\text{-}B=a_{ij}\text{-}b_{ij}$
$A.B=\sum a_{ij}\, b_{jk}$	$A+B=B+A$
$A+(B+C)=(A+B)+C$	$AB=/=BA$
$A(BC)=(AB)C$	$A(B+C)=AB+AC$
$(B+C)A=BA+CA$	$(A+B)^T=A^T+B^T$
$(AB)^T=B^TA^T$	$(A^T)^T=A$

symmetric ($\mathbf{A}^T=\mathbf{A}$) or skew-symmetric ($\mathbf{A}^T=\text{-}\mathbf{A}$). For example, the vorticity tensor is skew-symmetric ($\mathbf{W}^T=\text{-}\mathbf{W}$):

$$W_{ij}=(1/2)[(\partial v_i/\partial x_j)-(\partial v_j/\partial x_i)]=$$

$$\begin{bmatrix} 0 & \dot{\omega}_3/2 & -\dot{\omega}_2/2 \\ -\dot{\omega}_3/2 & 0 & \dot{\omega}_1/2 \\ \dot{\omega}_2/2 & -\dot{\omega}_1/2 & 0 \end{bmatrix} \qquad (9\text{-}16a)$$

The strain-rate tensor is symmetric ($\mathbf{D}^T=\mathbf{D}$):

$$D_{ij}=(1/2)[(\partial v_i/\partial x_j)+(\partial v_j/\partial x_i)]=$$

$$\begin{bmatrix} \dot{e}_{11} & \dot{\gamma}_{12}/2 & \dot{\gamma}_{13}/2 \\ \dot{\gamma}_{12}/2 & \dot{e}_{22} & \dot{\gamma}_{23}/2 \\ \dot{\gamma}_{13}/2 & \dot{\gamma}_{23}/2 & \dot{e}_{33} \end{bmatrix} \qquad (9\text{-}16b)$$

The sum of the strain-rate and vorticity tensors gives the velocity-gradient tensor of equation (9-7). There is no special mathematical property implied by this decomposition of the velocity-gradient tensor. *Any* square matrix (2x2 or 3x3) of real elements can always be expressed as the sum of a symmetric and skew-symmetric matrix. The initial matrix need not be symmetric or skew-symmetric itself. However, it is remarkable that the mathematical operation, such as the decomposition of the velocity-gradient tensor into its symmetric and anti-symmetric parts, provide tensors, each of which corresponds to a distinct physical aspect of the deformation.

□Exercise 9-6: Consider the following deformation tensors, and sketch the resulting deformations in Figure 9-4:
a) $\begin{bmatrix} 1 & 0 \\ 1 & 1 \end{bmatrix}$ **b)** $\begin{bmatrix} 1 & 0 \\ 0 & 1 \end{bmatrix}$ **c)** $\begin{bmatrix} 1 & 1 \\ 0 & 1 \end{bmatrix}$

□Exercise 9-7: a) Determine the strain rate tensor for the pure shear deformation of exercise 9-3. b) Prove that the elements of the vorticity tensor all are zero for pure shear. c) Prove that for pure shear the strain-rate tensor is identical to the velocity gradient tensor.

9-7 Determinants

A special operation, applied only to *square matrices*, is the determination of a particular scalar number or the *determinant*, unique for that matrix. The determinant of a 2x2 matrix is simply calculated by subtracting the product of the numbers in the two diagonal directions:

$$\text{matrix: } A = \begin{vmatrix} 8 & 6 \\ 3 & 5 \end{vmatrix} \qquad (9\text{-}17a)$$

$$\text{determinant: } |A| = (8\text{x}5)\text{-}(3\text{x}6)=22 \qquad (9\text{-}17b)$$

Finding the determinant of a 3x3 matrix is slightly more involved:

$$\text{matrix: } B = \begin{bmatrix} b_{11} & b_{12} & b_{13} \\ b_{21} & b_{22} & b_{23} \\ b_{31} & b_{32} & b_{33} \end{bmatrix} \qquad (9\text{-}18a)$$

$$\text{determinant: } |B| =$$

$$b_{11}\begin{vmatrix} b_{22} & b_{23} \\ b_{32} & b_{33} \end{vmatrix} - b_{12}\begin{vmatrix} b_{21} & b_{23} \\ b_{31} & b_{33} \end{vmatrix} + b_{13}\begin{vmatrix} b_{21} & b_{22} \\ b_{31} & b_{32} \end{vmatrix} \qquad (9\text{-}18b)$$

Application of the determinant to the stress tensor or parts of it yields two of the three *invariants* of the tensor. Invariants are scalar numbers,

□Exercise 9-8: a) Calculate the determinant of the following stress tensor:

$$\begin{bmatrix} 0 & 0 & 100 \\ 0 & 0 & 0 \\ -100 & 0 & 0 \end{bmatrix}$$

b) What is the physical significance of the scalar number obtained in (a)?

which remain the same for a particular stress condition, even if the coordinate axes change - something which would affect the numerical values of the elements in a stress tensor (see sections 10-9 & 10-11). The third invariant of the stress tensor is:

$$I_3 = |T| = \begin{vmatrix} T_{11} & T_{12} & T_{13} \\ T_{21} & T_{22} & T_{23} \\ T_{31} & T_{32} & T_{33} \end{vmatrix} \qquad (9\text{-}19a)$$

The second invariant of the stress tensor is:

$$I_2 = \begin{vmatrix} T_{21} & T_{23} \\ T_{32} & T_{33} \end{vmatrix} + \begin{vmatrix} T_{33} & T_{31} \\ T_{13} & T_{11} \end{vmatrix} + \begin{vmatrix} T_{11} & T_{12} \\ T_{21} & T_{22} \end{vmatrix} \qquad (9\text{-}19b)$$

The first invariant of the stress tensor is simply the sum of the normal stresses and does not make use of any determinant value:

$$I_1 = T_{11} + T_{22} + T_{33} \qquad (9\text{-}19c)$$

If the determinant of the stress tensor is zero, the matrix must be *singular*. An example of a singular stress tensor is (in units of MPa):

$$\begin{bmatrix} 100 & 0 & 0 \\ 0 & 0 & 0 \\ 0 & 0 & -100 \end{bmatrix} \qquad (9\text{-}20)$$

All singular stress tensors represent a state of plane stress. If the first invariant of the stress tensor is, also, zero, then the tensor is represents a plane, deviatoric stress.

9-8 Complex variables and complex functions

A complex number comprises a real part and an imaginary part. For example, $8+5i$ is a complex number with real part 8 and imaginary part $5i$. The symbol i denotes the square root of (-1), with the understanding that this is the solution of the square root of $i^2=-1$. Any complex variable, z, can be expressed in Cartesian cordinates in the form: $z=x+iy$. The complex function, W, can be defined as a function of the complex variable, z. For example, $W=z^2$ can be written as follows:

$$w = z^2 = (x+iy)^2 = x^2 - y^2 + 2ixy = u + iv \qquad (9\text{-}21a)$$

The real part of the complex function is:

$$u(x,y) = x^2 - y^2 \qquad (9\text{-}21b)$$

The imaginary part is:

$$v(x,y) = 2xy \qquad (9\text{-}21c)$$

One practical feature of a complex function is that it provides a single expression, comprising two other functions. This property is exploited in the representation of the complementary potential function and stream function of the same flow in terms of a single complex function (see section 13-3).

□Exercise 9-9: Find the real and imaginary parts of the following complex functions: (a) $W=f(z)=z$, (b) $W=f(z)=-z$, and (c) $W=f(z)=z^2$.

References

Good standard texts on applied mathematics for technical students are plentiful. Some suggestions are made below:

Advanced Mathematics (1971, McGraw-Hill, 407 pages), by M.R. Spiegel. This volume of Schaum's Outline Series in Mathematics provides practical examples of mathematical methods for engineers and scientists.

Mathematical Methods in the Physical Sciences (1983, Wiley, 793 pages, 2nd edition), by Mary L. Boas. This book is particularly intended for the student who wants to develop a basic competence in the mathematics needed in physics and engineering.

Mathematics in Geology (1988, Allen & Unwin, 299 pages), by John Ferguson. Basic mathematics is presented in a digestible form with applications to geological problems at an elementary level.

Stress and Deformation (1996, Oxford University Press, 292 pages), by Gerhard Oertel. A concise review of the mathematics of vectors and tensors, which leads from there to the mathematics of stress and strain. No less than 136 problems, which constitute about three quarters of the total text volume, are presented in this handbook on tensors in geology.