Chapter 12: Maps of Faulted Folds

THE MAP patterns of faulted planar strata have been outlined in chapter eleven, both for horizontal and for uniformly inclined beds. The map pattern of folded sequences may be quite complex, even in the absence of disruption by any faults, as previously discussed in chapters seven and eight. This chapter illustrates how the map pattern of folds may be further complicated by faulting. Any fault slip commonly causes displacement of fold closures in mappable units so that the effect can be seen on geological maps. The amount and direction of slip involved in such displacements can sometimes be reconstructed from the map pattern.

Contents: Map patterns of upright horizontal folds, disrupted by dip-slip faults, are discussed in section 12-1. The effect of faulting on the map appearance of upright, plunging folds is considered in section 12-2. Map patterns of strike-slip and oblique-slip faults are outlined in section 12-3. The use of displaced fold hinges in the assessment of oblique slip faults is explained in section 12-4. The analysis of faulted folds in terrains of rugged topography, which requires the use of structure contours, is addressed in section 12-5. Shear zones are introduced in section 12-6.

12-1 Dip-slip faulted, horizontal folds

Similar to the distinction made in section 11-4, dip-slip faults may be either parallel (longitudinal) or normal (transverse) to the strike of the folded strata. Transverse faults are discussed first, followed by a brief outline of faults longitudinal to the strike of the folded sequence.

Transverse, dip-slip faults

The sequence of block diagrams of Figures 12-1a to c illustrates the effect of transverse faulting on the map pattern of a synform with a vertical axial surface and a horizontal hinge line. After leveling of the ground surface by erosion, the exposure width of the rocks in the *synformal core*

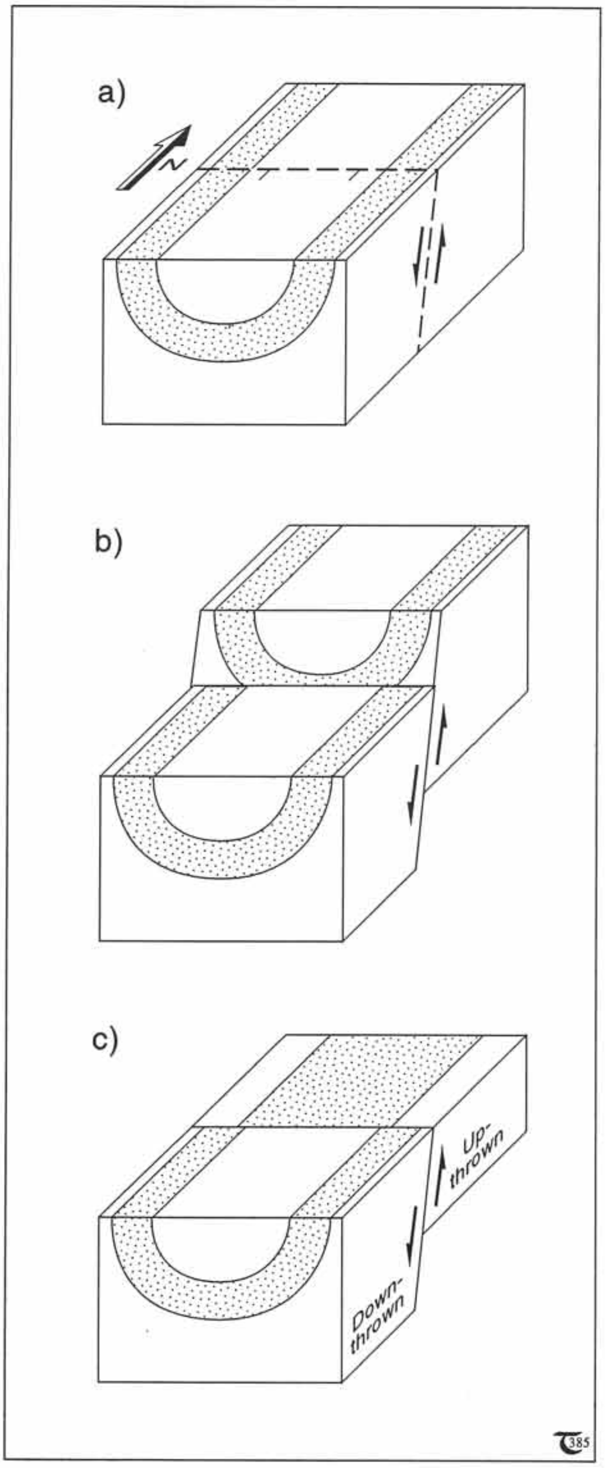

Figure 12-1: *a) to c) Three-stages of transverse, dip-slip faulting of an upright, horizontal synform: pre-faulting, post-faulting, and post-erosional.*

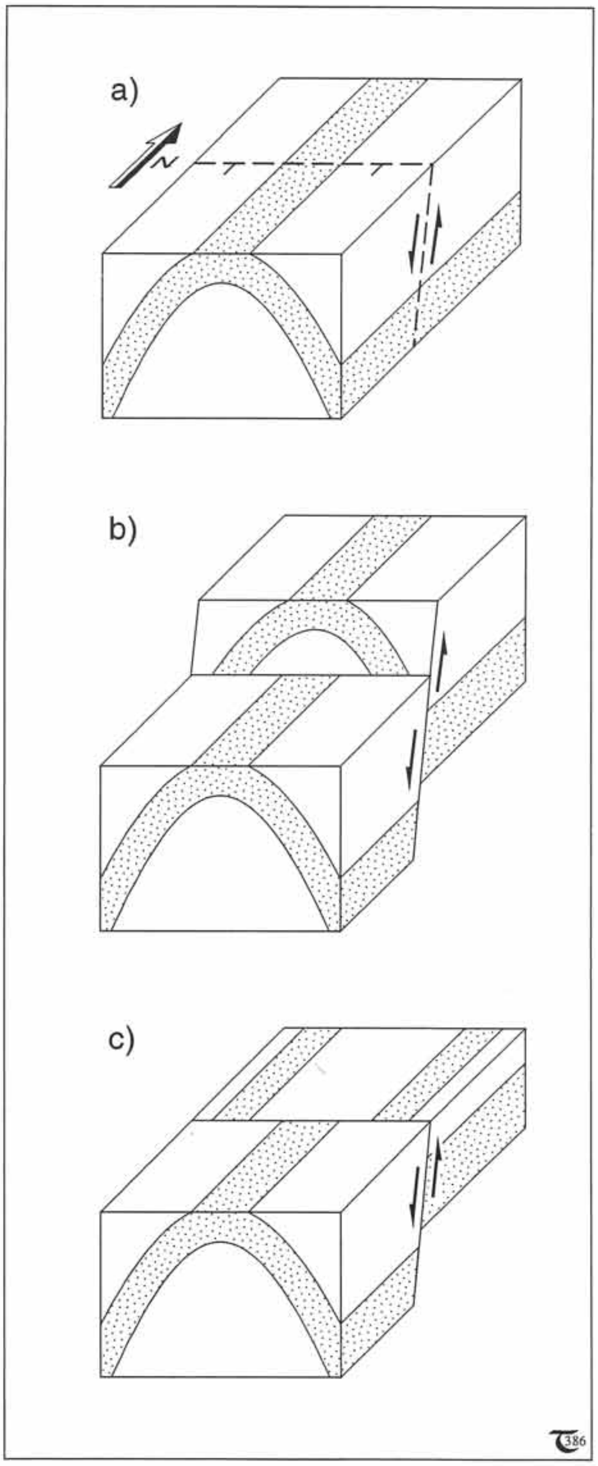

Figure 12-2: *a) to c) Three-stage perspective diagrams of upright, horizontal antiform, displaced by transverse, dip-slip fault.*

of the downthrown block is larger than that exposed on the surface of the upthrown block (Fig. 12-1c). Consequently, the change in width of the outcrop pattern of synformal fold closures across transverse faults reveals which of the two fault walls has been downthrown.

In the analysis of fold closures displaced by faults, it is important to establish first whether the affected closures are antiformal or synformal. Contrary to what is observed for dip-slip faulted synforms, the exposure width of rocks in the core of an *antiform is smaller in downthrown blocks* (as compared to the corresponding width on the surface of the eroded upthrown block) (Fig. 12-2a to c). The sequences portrayed in Figures 12-1 and 12-2 show the effect of steep, *normal*, transverse faulting upon the fold pattern. The effect of a steep, *reverse* fault would be similar. Downthrown blocks increase the stratigraphic section exposed in the core of faulted synforms, whether due to normal or reverse faulting. Conversely, in the case of faulted antiforms, it is always the upthrown blocks that expose the deeper layers in the fold core.

□Exercise 12-1: Interpret the map pattern of Figure 12-3a. a) Indicate any axial plane traces, the upthrown and downthrown blocks, and any other discontinuities. b) Complete section A-B in Figure 12-3b. c) Discuss the geological history of the area.

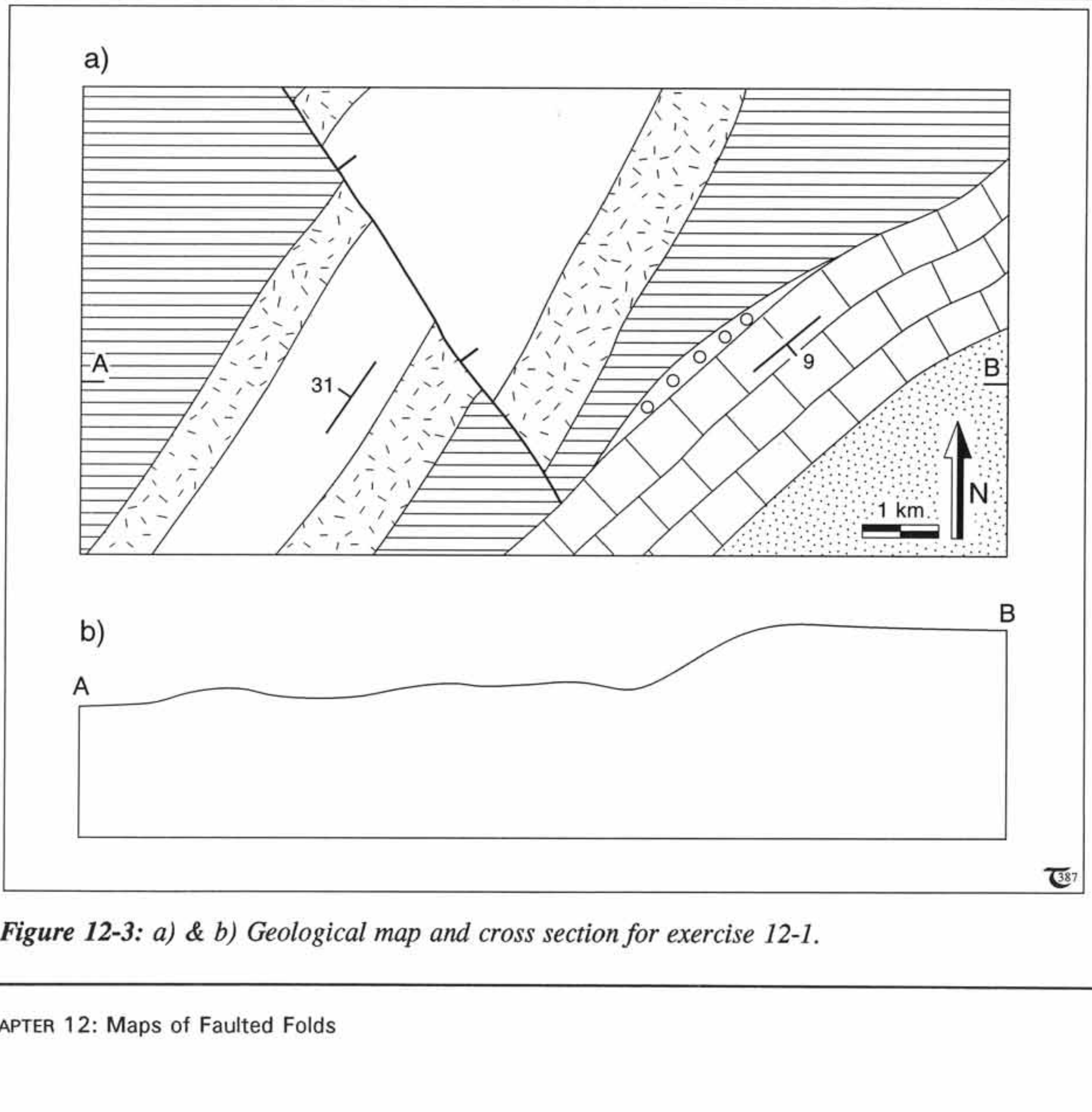

Figure 12-3: a) & b) Geological map and cross section for exercise 12-1.

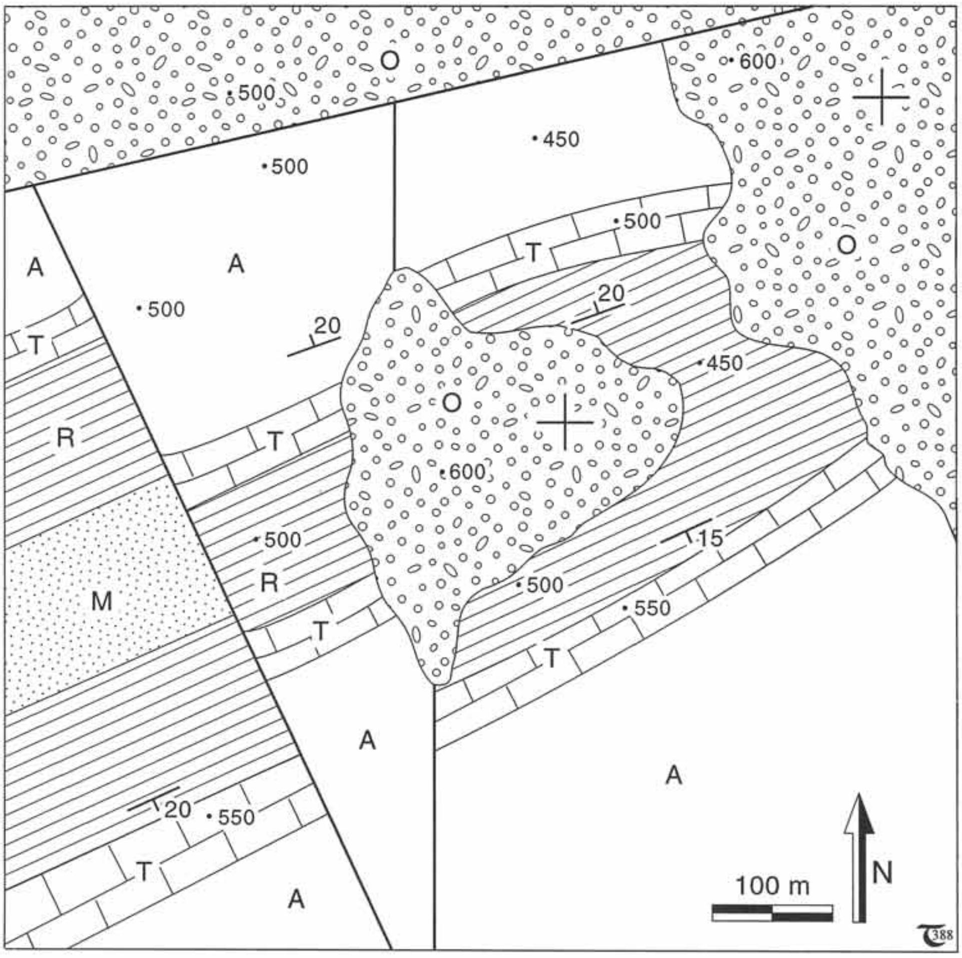

☐Exercise 12-2: The map of Figure 12-4 exposes normal faults.
a) Use hachures to indicate the downthrown blocks. b) Rank the various lithological units (A, T, R, M, and O) from old to young.
c) Discuss the geological history of the area.
d) Where are the oldest rocks exposed?
e) Assume hydrocarbons are trapped in the fold core. Mark the best drill location.

Figure 12-4: *Geological map for exercise 12-2. Elevations indicated are in meters.*

Longitudinal, dip-slip faults

The disruption of the map pattern of upright, horizontal *synforms* by longitudinal faulting is illustrated in Figure 12-5a to c. The effect of any longitudinal faulting, whether by normal or reverse dip-slip, is a *reduction of the stratigraphic section* in the core of synforms. The youngest rocks of the stratigraphic sequence will be found in the downthrown wall of the synform, near the fault trace (Fig. 12-5c).

Conversely, longitudinal dip-slip faulting of upright, horizontal *antiforms* results in an *increase of the stratigraphic section* near the fault trace (Fig. 12-6a to c). The oldest strata will be found in the upthrown wall of the antiform near the trace of the dip-slip fault (Fig. 12-6c). The sequences portrayed in Figures 12-1 and 12-2 show the effect of steep, *normal*, longitudinal faulting upon the map patterns of folds. The effect of a steep, *reverse* fault would be similar.

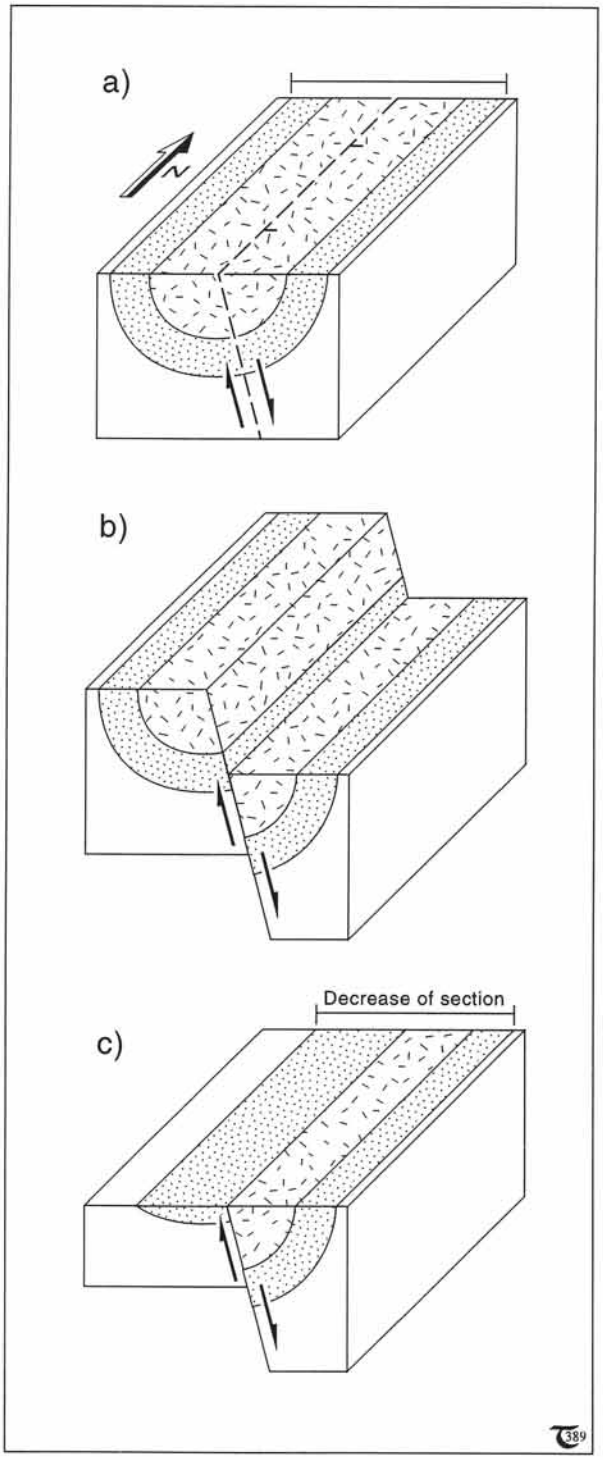

Figure 12-5: *a) to c) Three-stage perspective diagrams of upright, horizontal synform, displaced by longitudinal, dip-slip fault.*

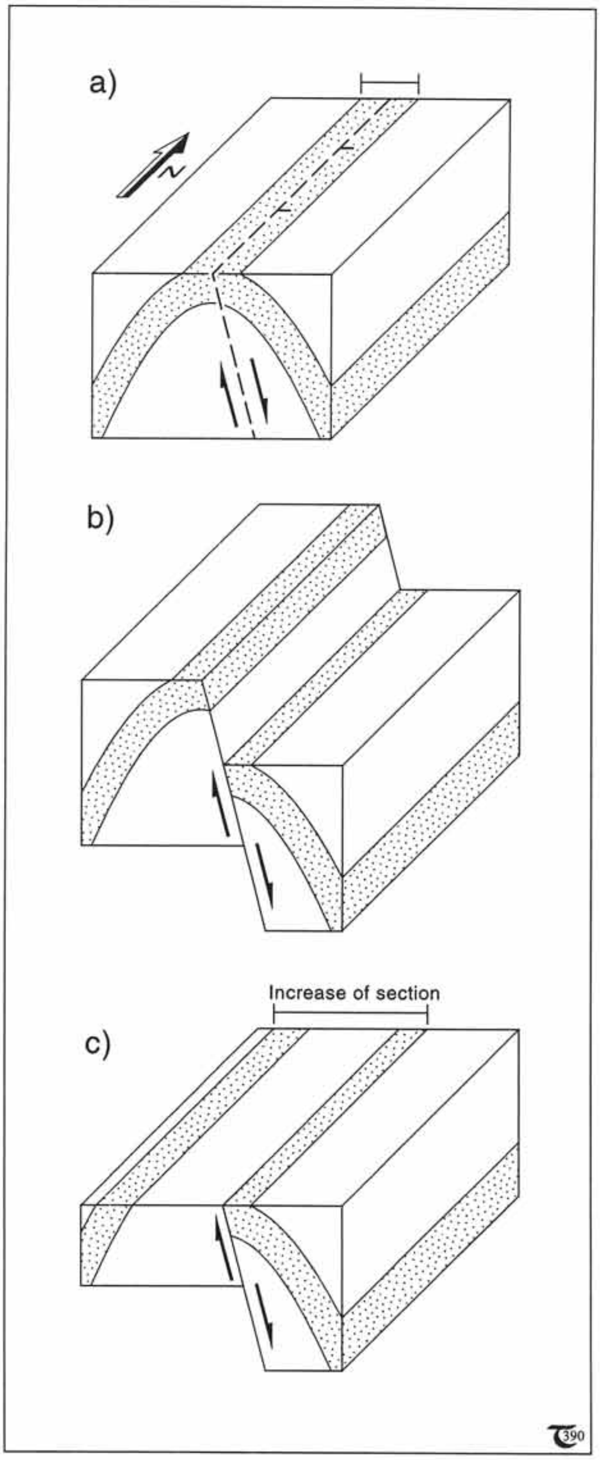

Figure 12-6: *a) to c) Three-stage perspective diagrams of upright, horizontal antiform, displaced by longitudinal, dip-slip fault.*

☐Exercise 12-3: Interpret the map pattern of Figure 12-7. a) Indicate any axial plane traces, the upthrown and downthrown blocks, and any other discontinuities. b) Complete cross-section A-B. The profile of the ground surface can be approximated using the elevation data indicated on the map. c) Discuss the geological history of the area.

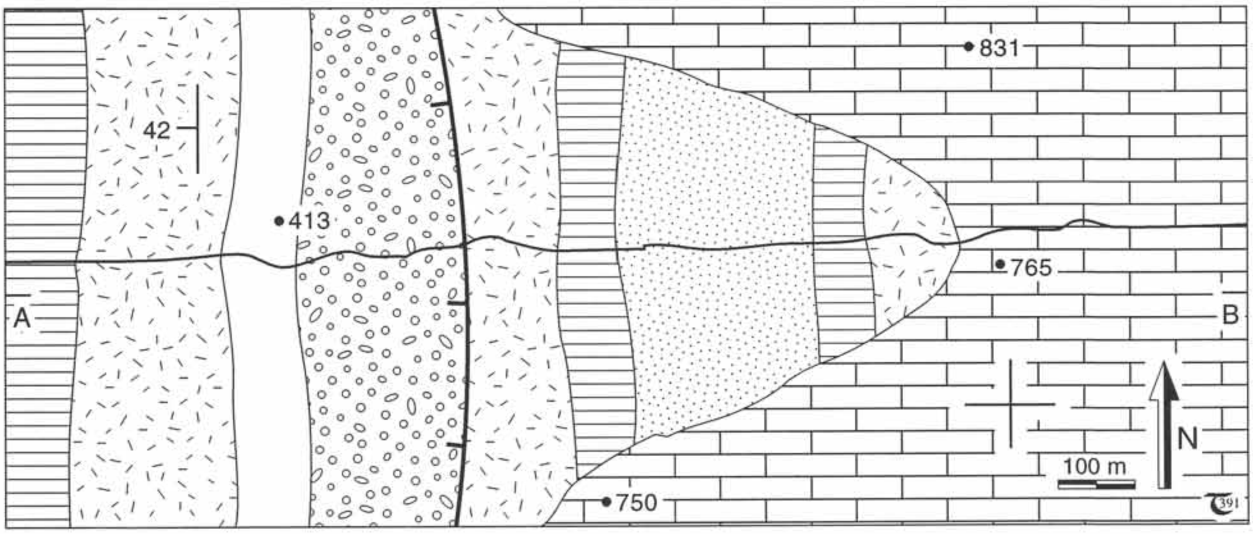

Figure 12-7: Geological map for exercise 12-3. Elevations indicated are in meters.

☐Exercise 12-4: The map of Figure 12-8 traverses a region of folded and faulted strata. The symmetry in the stratigraphic succession in the central part of the map indicates the presence of a synform. The location of two longitudinal faults is obvious from the omission and repetition of strata. a) Construct an east-west cross section along the southern margin of the map. b) What is the relative movement of the central block - upward or downward?

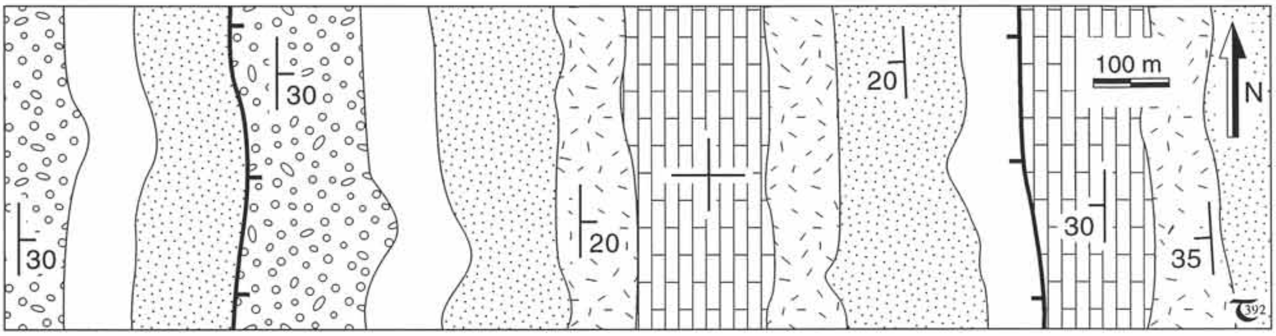

Figure 12-8: Geological map for exercise 12-4. The ground surface is relatively flat.

12-2 Dip-slip faulted, plunging folds

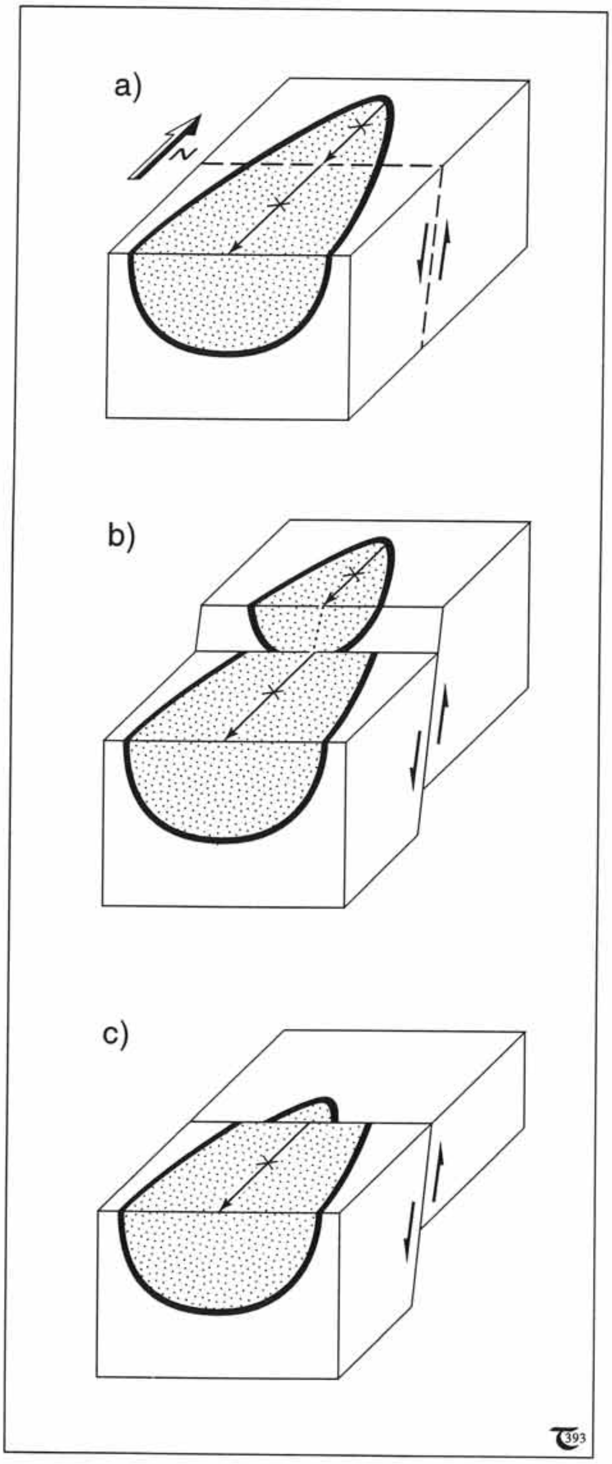

Figure 12-9: *a) to c) Three-stage perspective diagrams of upright, plunging synform, displaced by transverse, dip-slip fault.*

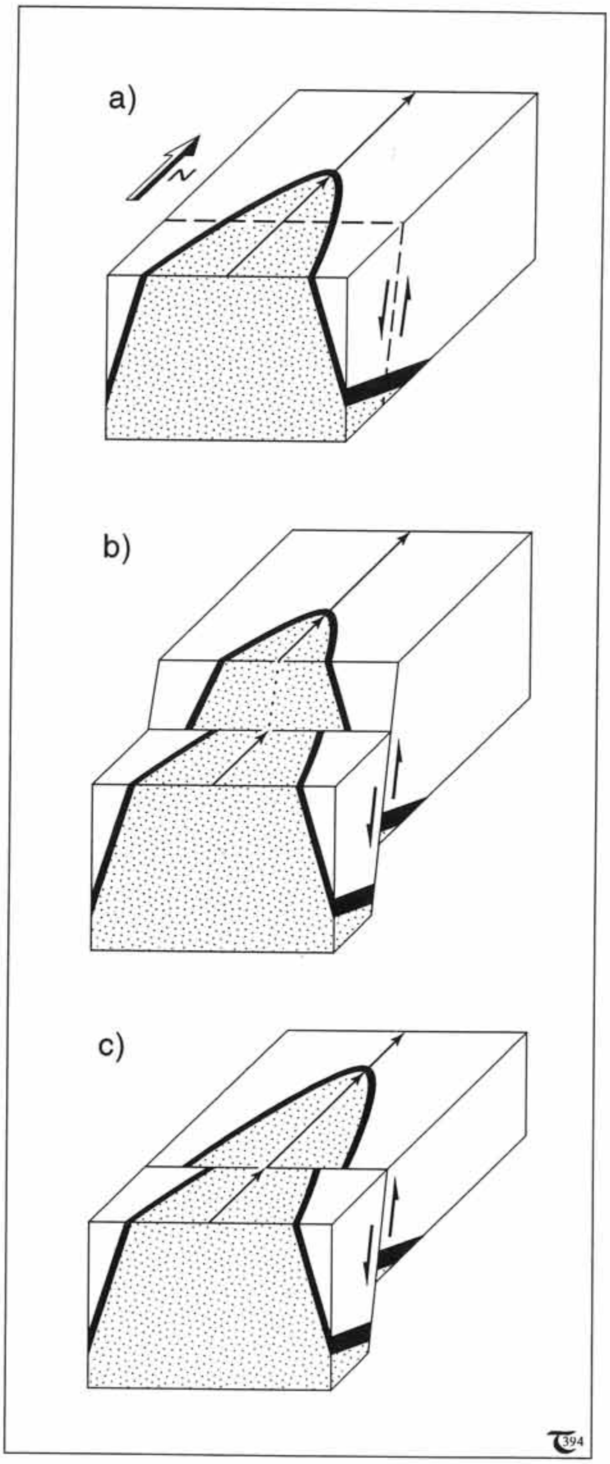

Figure 12-10: *a) to c) Three-stage perspective diagrams of upright, plunging antiform, displaced by transverse, dip-slip fault.*

Transverse faults

Fold closures of plunging synforms in mappable units tend to disappear in the upthrown block of transverse dip-slip faults (Fig. 12-9a to c). The effect is similar for normal and reverse faults. However, if the northern block in Figure 12-9a to c were to be downthrown instead of being upthrown, then repetition of the plunging synform-hinge occurs in the downthrown block, after leveling of the ground surface by erosion.

☐Exercise 12-5: a) Determine whether the NW-block of the map in Figure 12-11 is upthrown or downthrown. b) Complete section A-B. Fault dip is unknown; assume the fault to be subvertical.

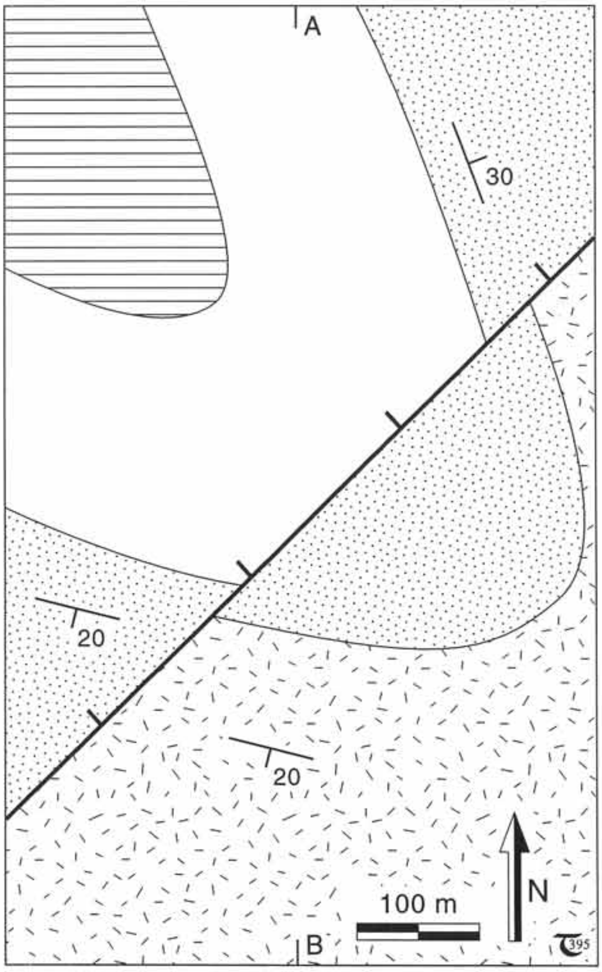

__Figure 12-11:__ Geological map for exercise 12-5. Assume the area is a flat terrain.

The fold hinge of plunging antiforms is repeated in the upthrown block of transverse, dip-slip faults (Fig. 12-10a to c). The effect is, again, similar for normal and reverse faults. But if the northern block of Figure 12-10a to c were to be downthrown instead of being upthrown, the antiformal closure would be omitted in the downthrown block, after leveling of the ground surface by erosion (not illustrated).

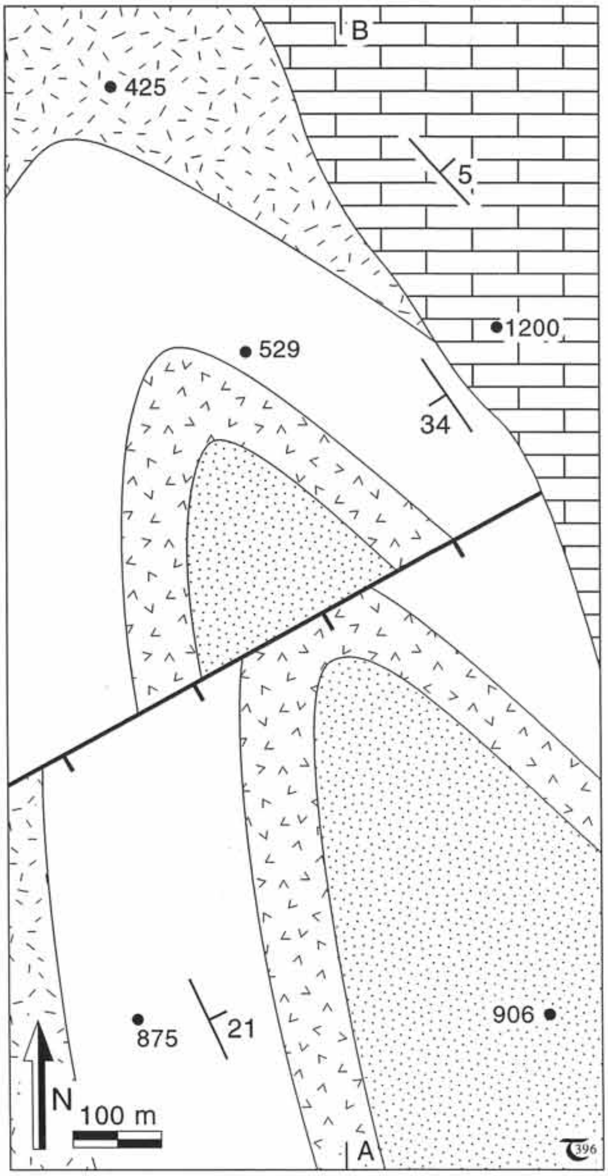

__Figure 12-12:__ Geological map for exercise 12-6. Local elevations are in meters.

☐Exercise 12-6: Interpret the map pattern of Figure 12-12. a) Indicate any axial plane traces, antiform and synform symbols, the direction of the fold plunge, the upthrown and downthrown blocks, and any other discontinuities. b) Complete section A-B; assume that the map area is that of a flat terrain. c) Discuss the geological history of the area.

☐Exercise 12-7: The map pattern of Figure 12-13 shows plunging folds in a flat area, cut by transverse, dip-slip faults. a) Indicate any axial plane traces, antiform and synform symbols, the direction of the fold plunge, and the upthrown and downthrown blocks. b) Complete section A-B. c) Discuss the geological history of the area.

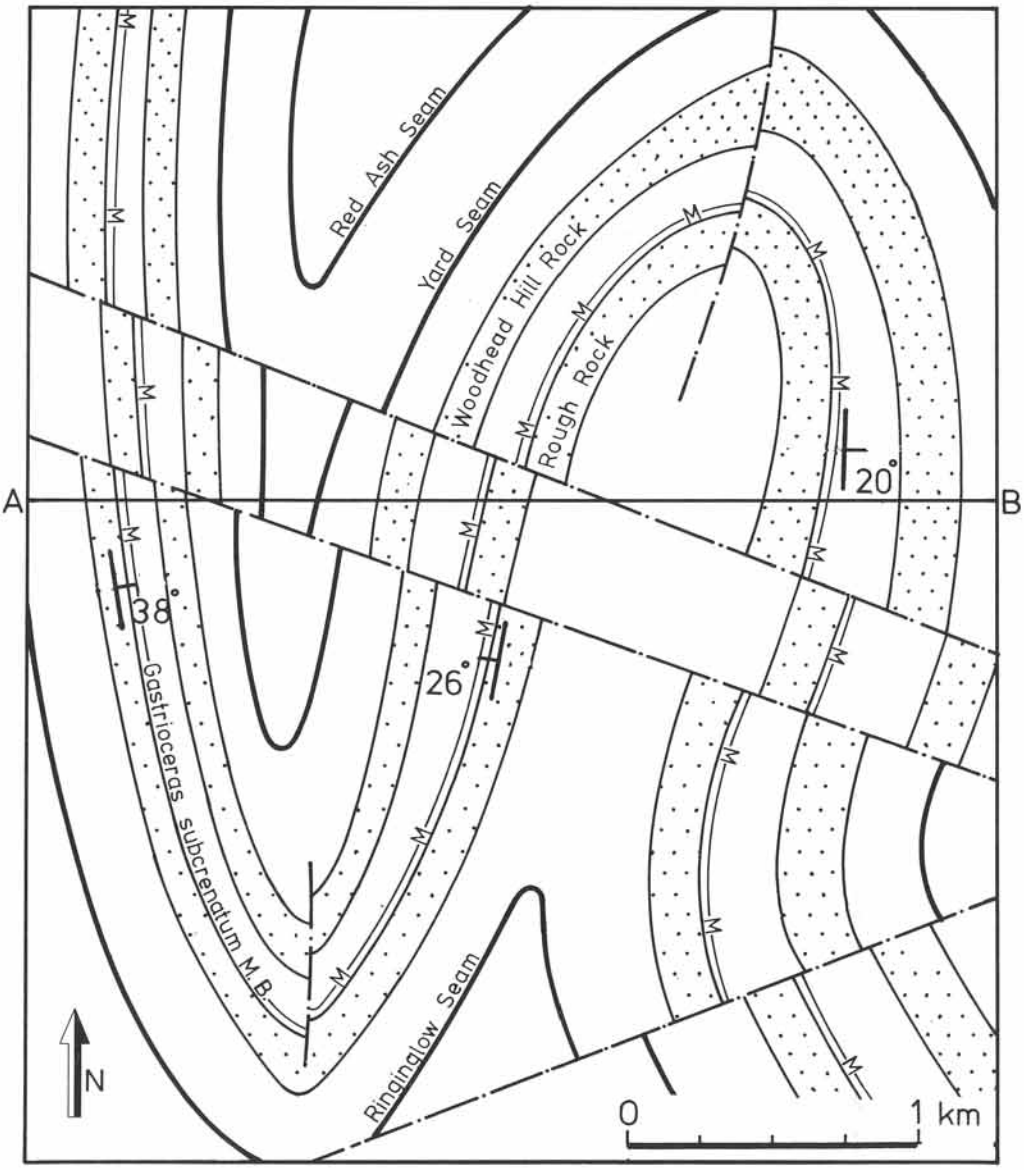

Figure 12-13: Geological map for exercise 12-7.

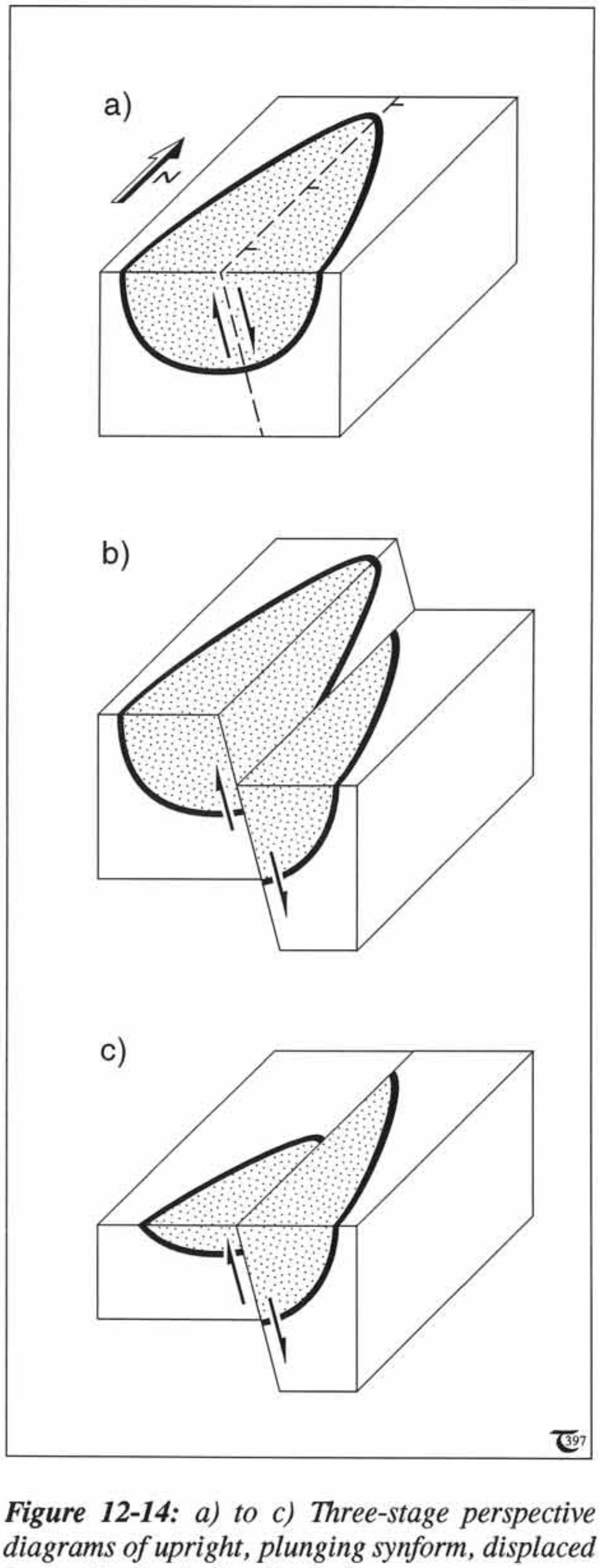

Figure 12-14: *a) to c) Three-stage perspective diagrams of upright, plunging synform, displaced by longitudinal, dip-slip fault.*

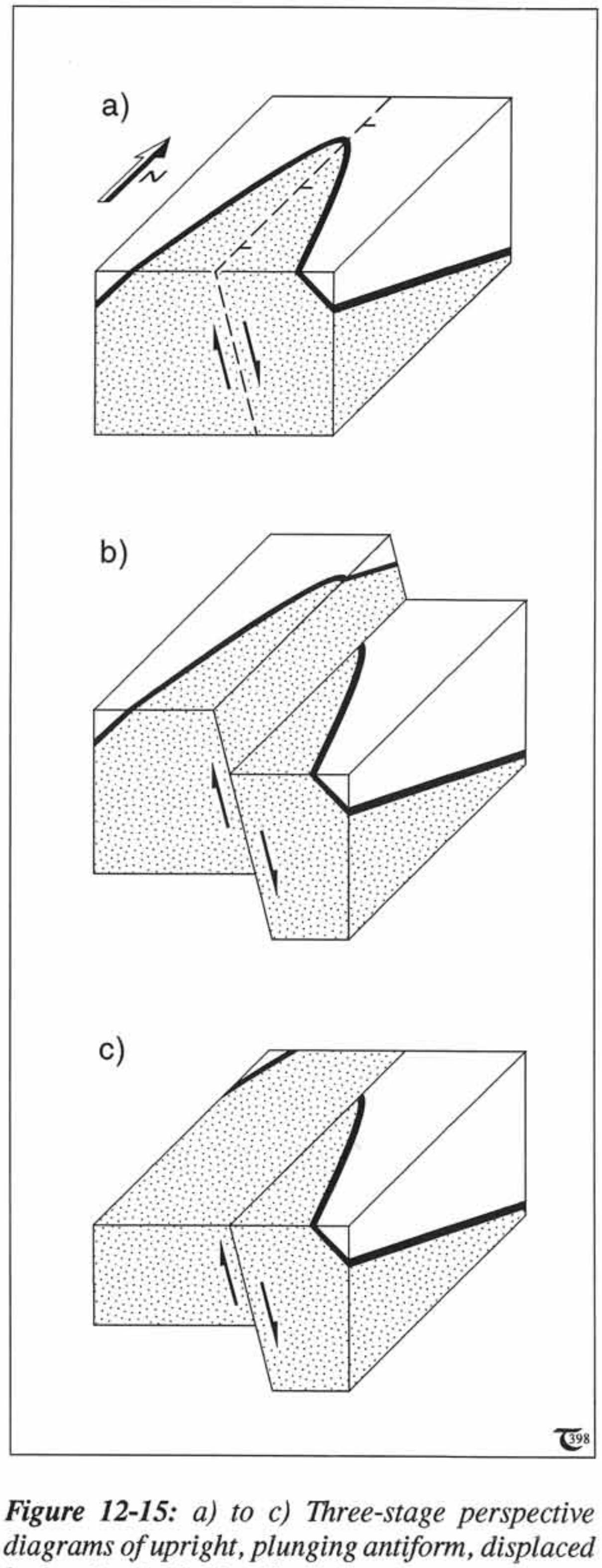

Figure 12-15: *a) to c) Three-stage perspective diagrams of upright, plunging antiform, displaced by longitudinal, dip-slip fault.*

Longitudinal faults

The map pattern of plunging fold closures, disrupted by longitudinal, dip-slip faults, typically display strike separation of the fold hinge (Figs. 12-14 and 12-15). This strike separation may easily be (mis)interpreted as a result of strike-slip movement, but such slip is not necessarily required to explain the map pattern.

The map pattern of Figure 12-16a shows a doubly plunging synform, displaced by longitudinal normal faults. The outcrop pattern of the southern limb of the synform is repeated three times in the map pattern, due to the normal faulting. In order to understand this map better, solve excercise 12-8.

☐Exercise 12-8: Study the map pattern of Figure 12-16a. a) Indicate any axial plane traces, antiform and synform symbols, the direction of the fold plunge, and the upthrown and downthrown blocks. b) Complete section A-B given in Figure 12-16b. c) Discuss the geological history of the area.

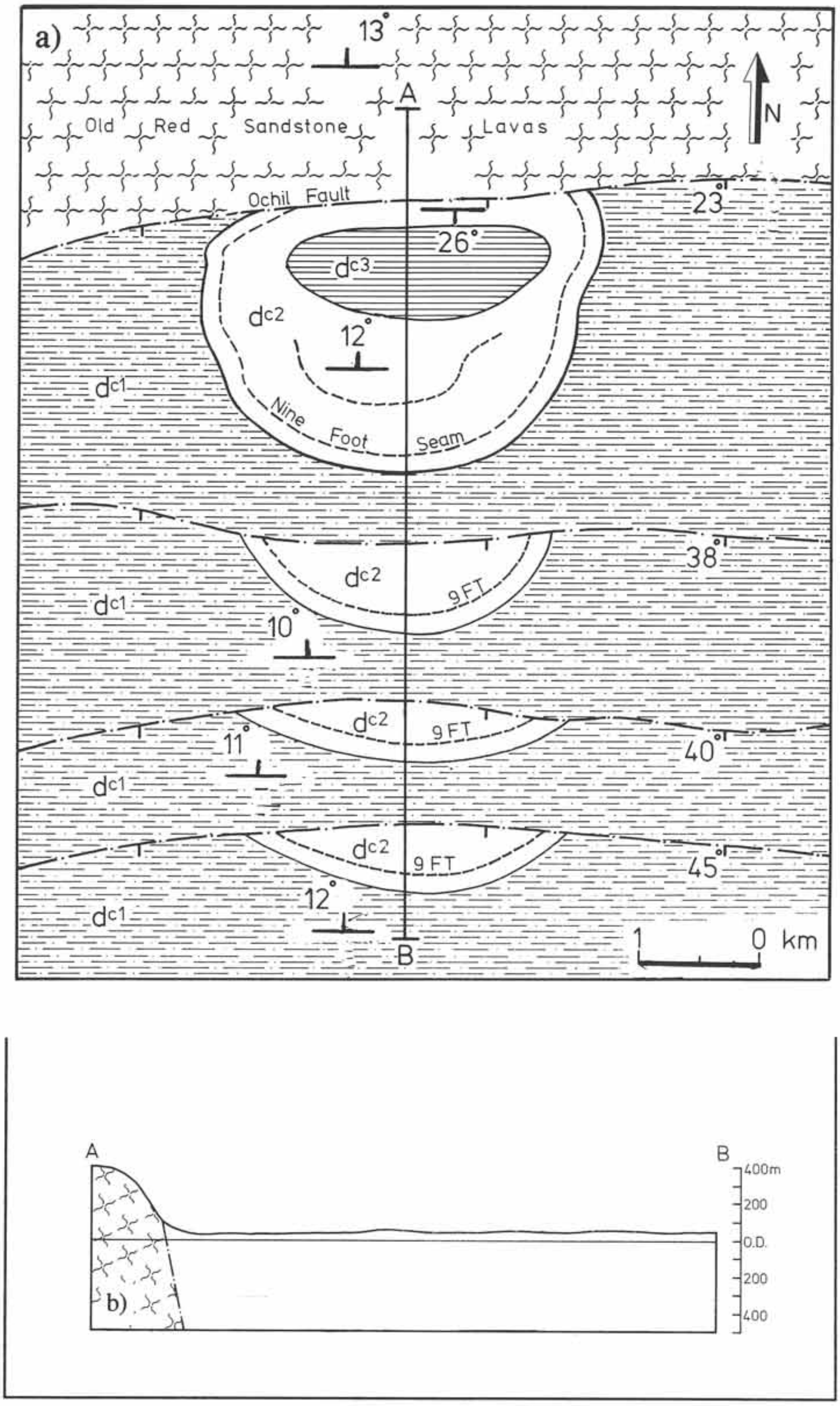

Figure 12-16: *a) & b) Geological map and cross-section for exercise 12-8.*

12-3 Strike-slip faults

So far, our attention has been focussed on the disruption of fold patterns by dip-slip faults. Strike-slip faults that are longitudinal to plunging folds result in map patterns similar to those illustrated in Figures 12-14c and 12-15c. Without detailed field observations (not explained here), the respective map patterns of fold hinges longitudinally faulted by dip-slip faults and strike-slip faults cannot be distinguished.

Generally, the interpretation of transverse faults is less ambiguous than that of longitudinal faults. Transverse, *strike-slip* faults cause lateral transfer of outcrop patterns and displace the fold-limbs and the trace of the axial plane, all with the same amount of strike separation (Fig. 12-17a & b). This is in contrast to the disruption by dip-slip faulting, which displaces the outcrop pattern of the fold limbs in opposite directions without any strike separation of the axial plane trace (Fig. 12-17c & d). This assumes the faulted folds are upright. Some displacement of the axial plane trace would occur in inclined folds, if cut by transverse, dip-slip faults.

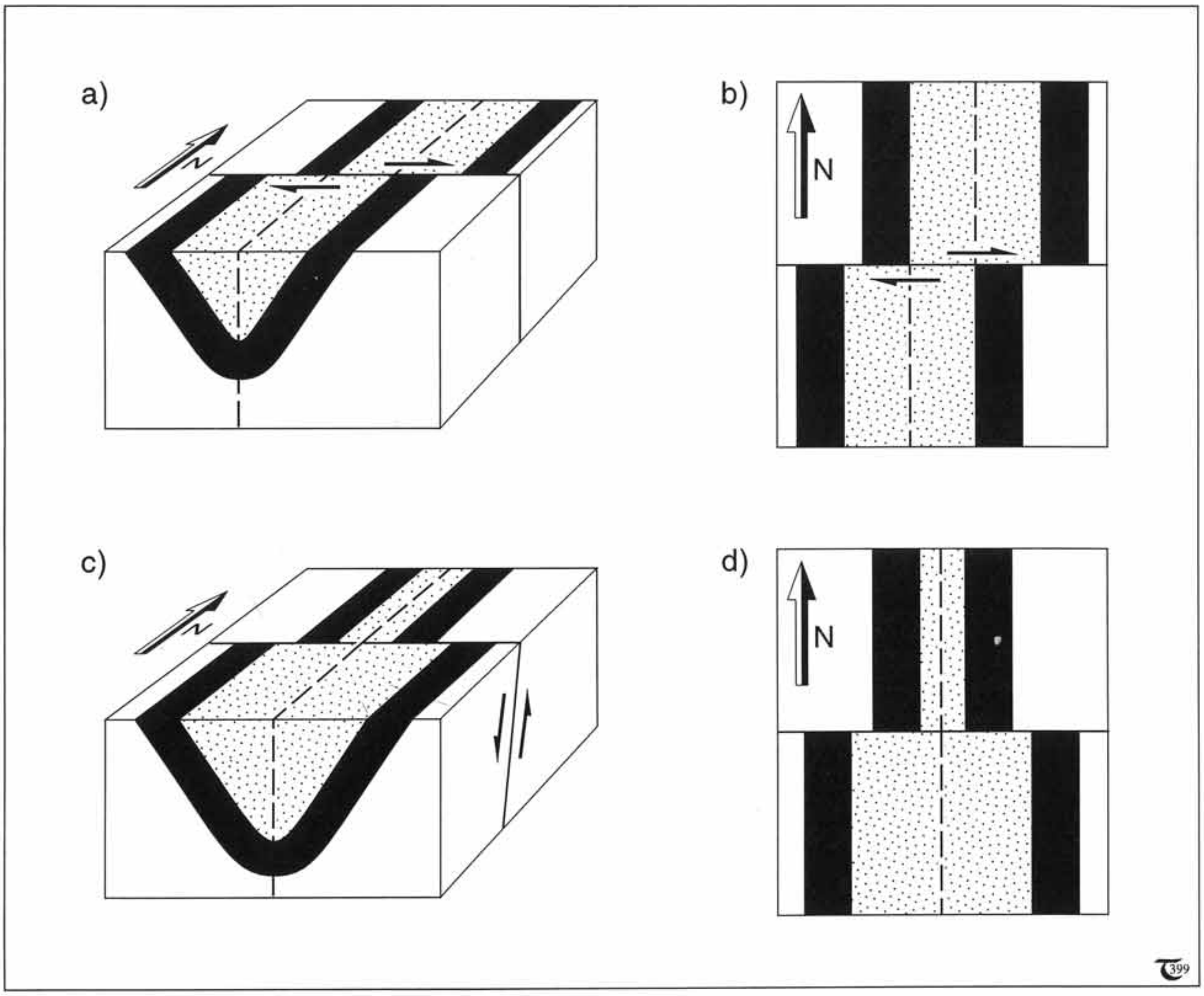

Figure 12-17: *a) to d) Perspective diagrams and map views of right-lateral, strike-slip fault (a & b) and steep, dip-slip fault (c & d).*

12-4 Oblique-slip faults

Faulted folds are particularly interesting when it comes to interpreting strike separations resulting from oblique fault slip. Faulted folds provide one of the few easily recognized linear features (fold closures in specific stratigraphic units) available in geology. Thus, one can sometimes determine the actual fault slip from the displacement of a fold hinge line (Fig. 12-18). The actual slip can be determined using structure contours, provided the dip of the fold limbs is everywhere known. The basic concept of structure contours for solving map problems involving undisrupted, folded layers, has been outlined in chapter eight.

The map pattern of Figure 12-19 illustrates a faulted, upright, horizontal fold. The strike separations seen in this map cannot be explained by either dip-slip or strike-slip alone. The map pattern must be the result of oblique slip and, thus, includes the combined effects of dip-slip and strike-slip displacement (see exercise 12-10).

☐Exercise 12-9: The details of the map pattern in Figure 12-19 can be interpreted in two different ways, depending upon whether the displaced fold is an antiform or synform. Consider each of the two possibilities, and indicate whether the southern block was downthrown or upthrown.

☐Exercise 12-10: Assume that the fold cut in Figure 12-19 is a chevron type synform with both limbs dipping at 45°. Use structure contours to establish the amount of net slip on the fault plane, which itself is subvertical.

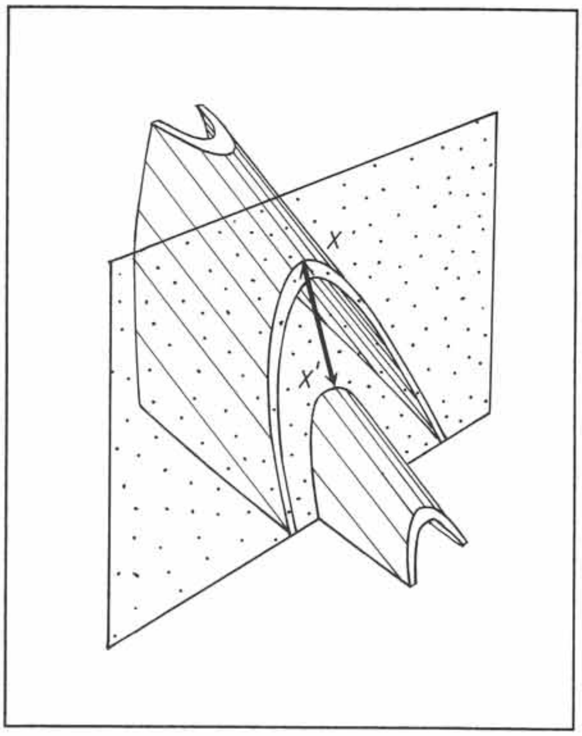

Figure 12-18: Faulted, upright, plunging antiform. The orientation of the oblique slip vector and the amount of slip can be determined from the displaced hinge line of the fold.

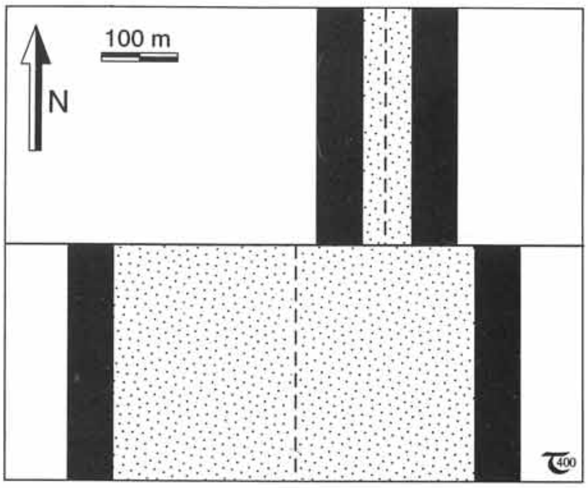

Figure 12-19: Map pattern for exercises 12-9 and 12-10.

☐Exercise 12-11: Interpret the displacements seen in the maps of Figures 12-20a and b.

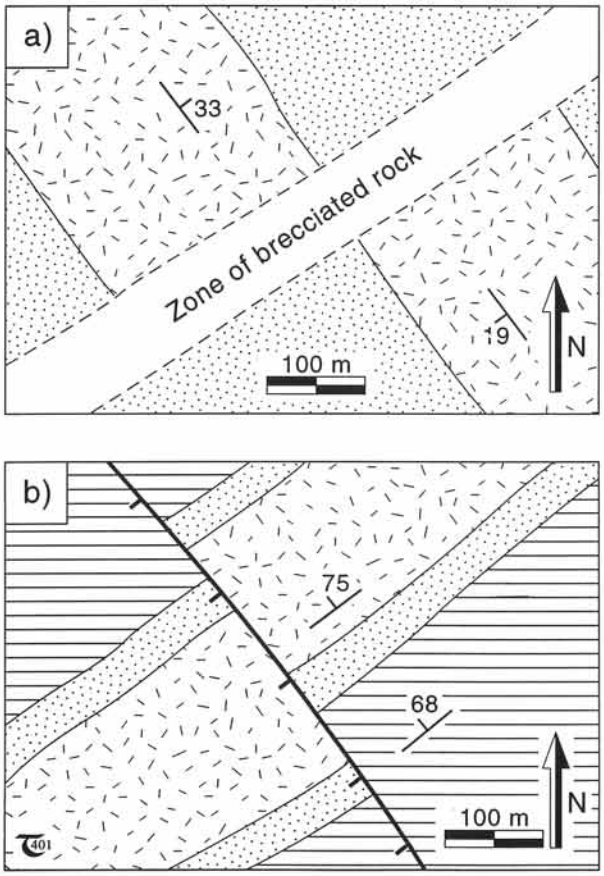

Figure 12-20: a) & b) Geological maps for exercise 12-11.

12-5 Faulted folds in topographic relief

The above discussion considered the effect of fault dislocations upon the outcrop patterns of folds. The ground surface was assumed to be completely leveled by erosion. This kept the analysis relatively simple, because the outcrop pattern was not distorted by any topographic relief. When interpreting map patterns of terrains with rugged topography, one needs to take into account the visual distortion of the map pattern caused by the irregular incision of the terrain.

Figure 12-21 shows an example of a detailed geological map that includes topographic contours. The true trend of the fold limbs and the fault planes in such terrains can be obtained, making use of structure contours (exercise 12-12).

12-6 Shear zones

The disruption and displacement of rock units may occur along a narrow, discrete surface of failure (Fig. 12-22a). This type of localized deformation commonly occurs when faults are formed at shallow depths, where the rock cannot deform by ductile distortion. However, in deeply eroded rocks, uplifted in orogenic belts and cratons, a much more diffuse type of localized distortion is encountered, termed *shear zones*, resembling the geometry illustrated in Figure 11-22b. If a shear zone involves ductile deformation only, the displaced reference beds are distorted

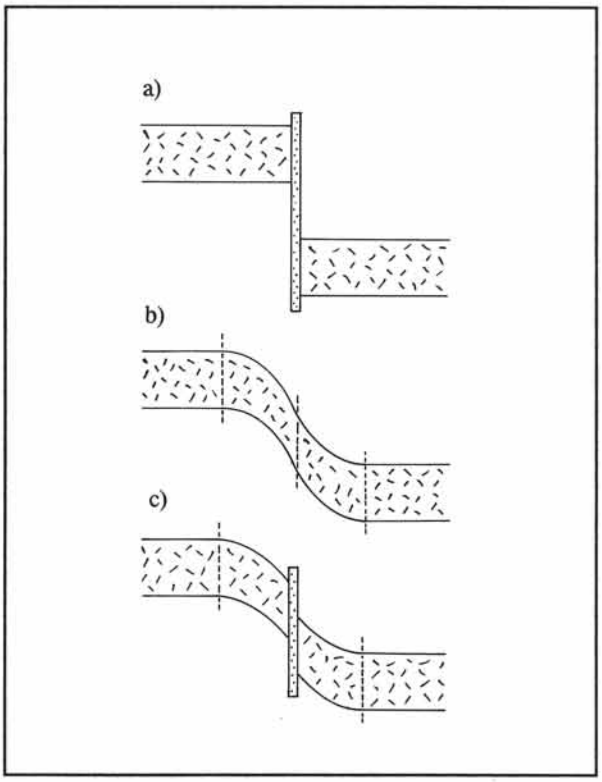

Figure 12-22: a) to c) Various types of localized deformations: (a) brittle fault, (b) ductile shear zone, and (c) brittle-ductile shear zone.

☐Exercise 12-12: Examine the map pattern of Figure 12-21. A N-S striking fault divides the map into an east and a west part. a) First concentrate on the fault plane itself; construct structure contours to determine the azimuth and dip of that fault plane. b) Continue your analysis by constructing structure contours for the sandstone layer in the hanging wall; determine the azimuth and dip of the layer. c) Next, concentrate on the outcrop pattern of the sandstone layer in the foot wall; construct stratum contours, and determine the orientation of the fold hinge line (plunge/trend). d) Determine the orientation of the fold limbs (azimuth/dip). e) Construct an E-W section along line A-B across the map. f) With the understanding of the map pattern thus derived, it is possible to establish whether the fault is a reverse or a normal fault.

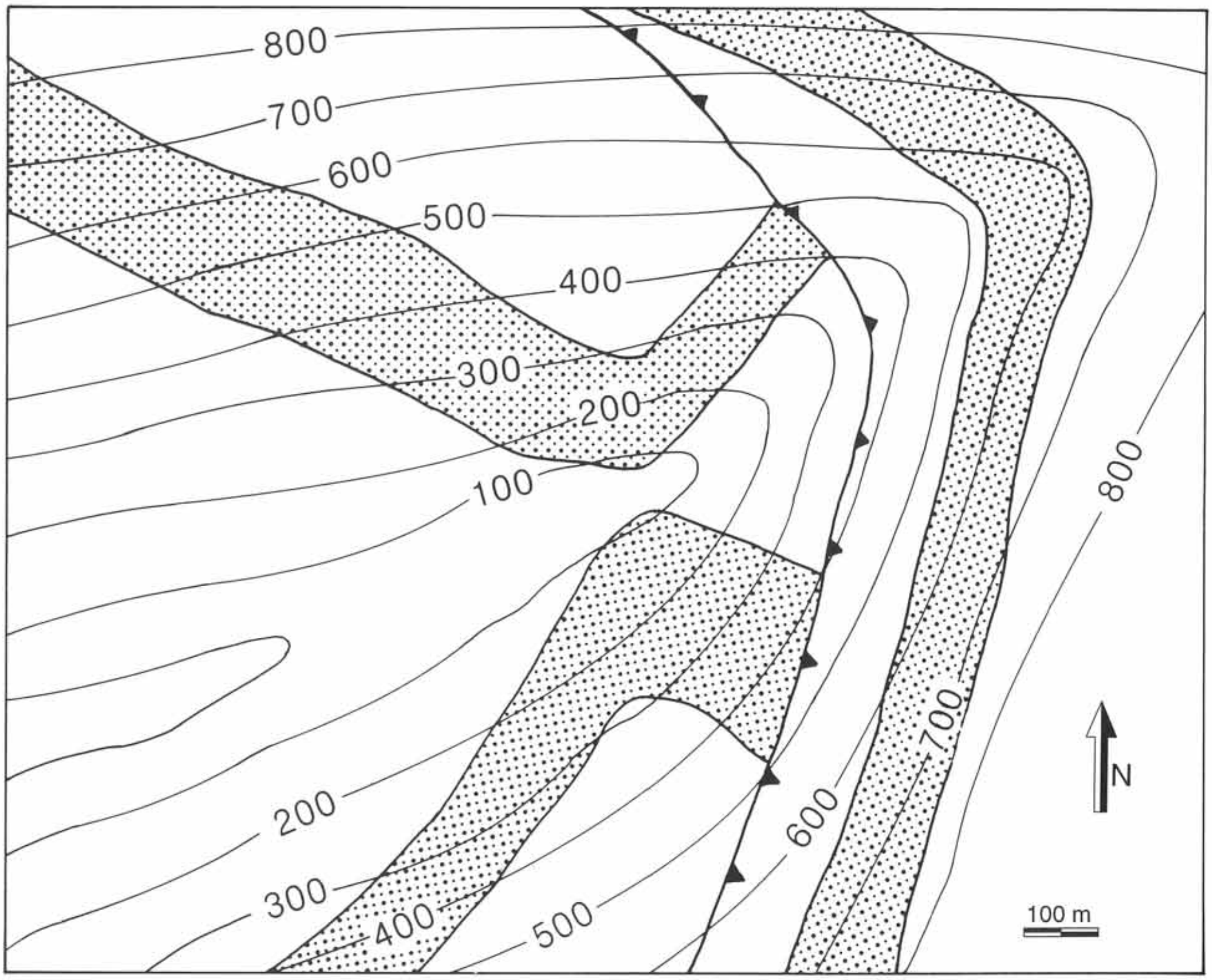

Figure 12-21: Outcrop pattern of a faulted sandstone formation on a topographic base map. See exercise 12-12.

by the shear but remain continuous (Fig. 12-22b). But some shear zones involve a discrete disruption surface and, therefore, are termed brittle-ductile shear zones (Fig. 12-22c).

Figure 12-23 illustrates the map pattern of the Palomares shear zone, southeast Spain. A strike-slip fault, in the central part of this brittle-ductile shear zone, displaces the Alhamilla anticline left-laterally. The horizontal strike-slip on the central fault amounts to some 50 kilometers. The proper interpretation of shear zones requires detailed ground studies and good understanding of techniques of strain analysis, beyond the scope of basic map interpretation methods outlined here. These techniques are treated elsewhere (see, for example, the companion textbook, *Principles of Rock Mechanics*).

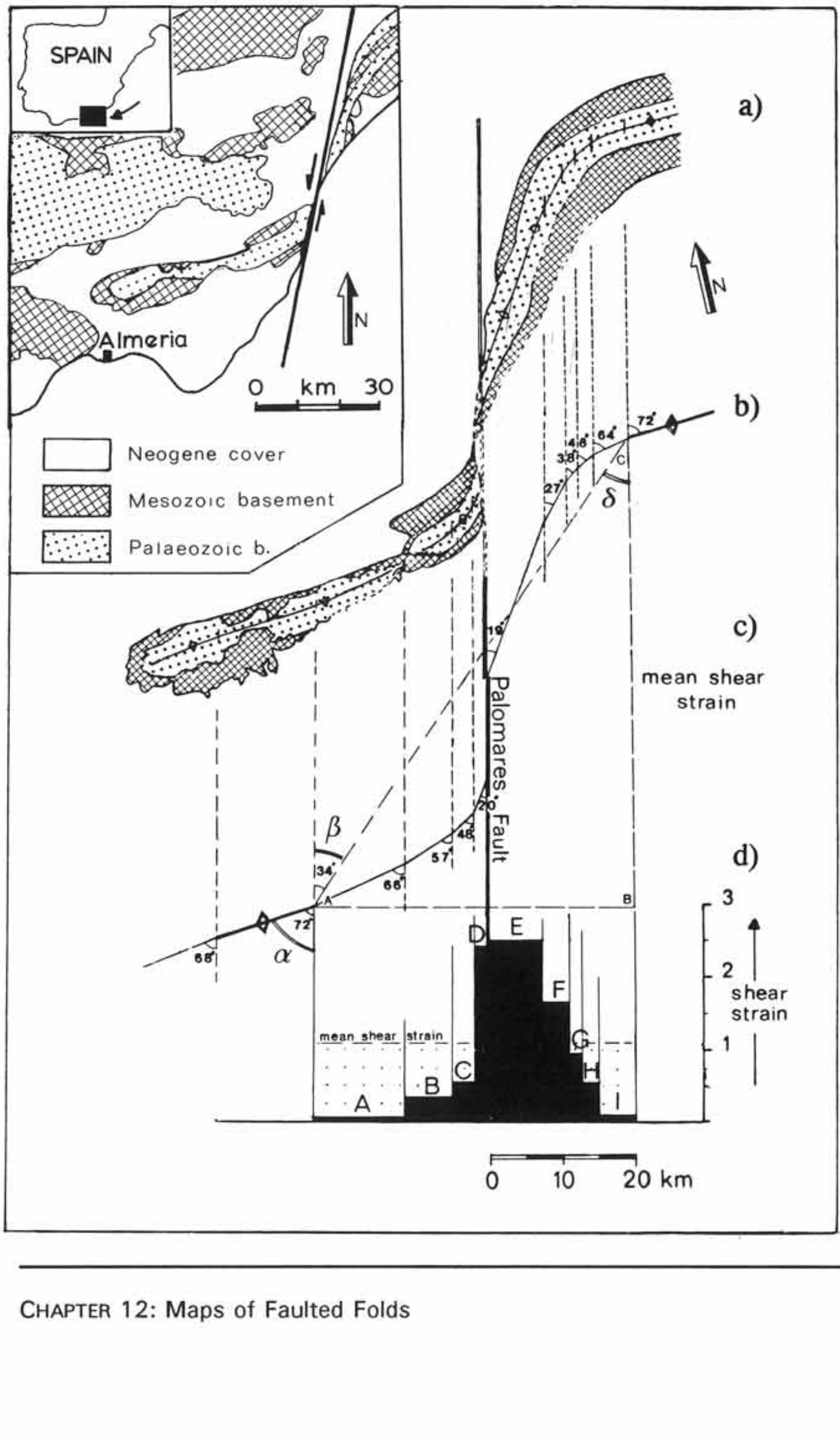

Figure 12-23: *Palomares brittle-ductile shear zone. a) Outcrop pattern of the deflected and disrupted Alhamilla anticline. b) Angular deflection of the fold axis. c) Mean shear strain across the shear zone. d) Strain-distance histogram across the Palomares shear zone.*